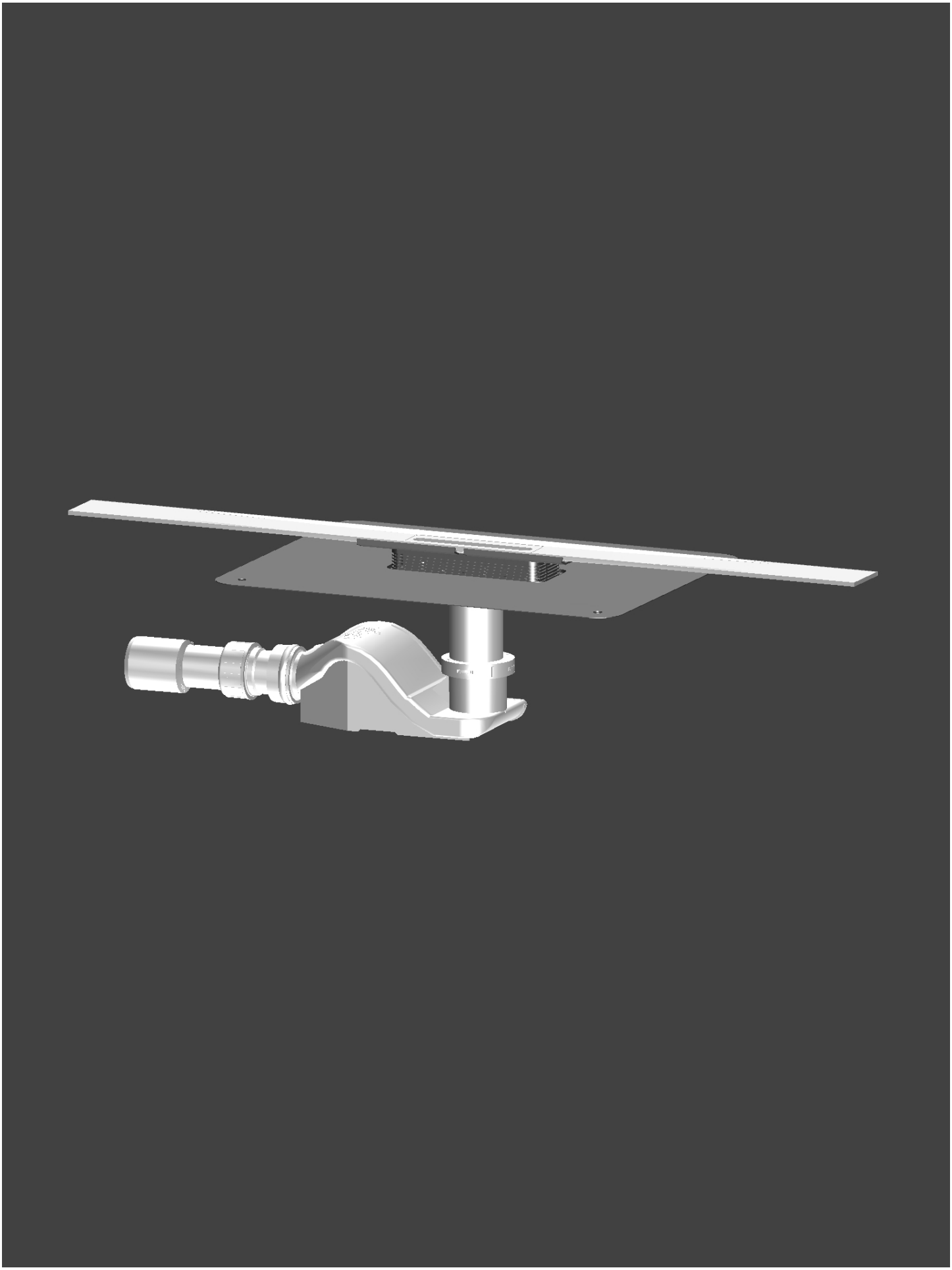

Date: January 27, 2023
Creator: TransMagic