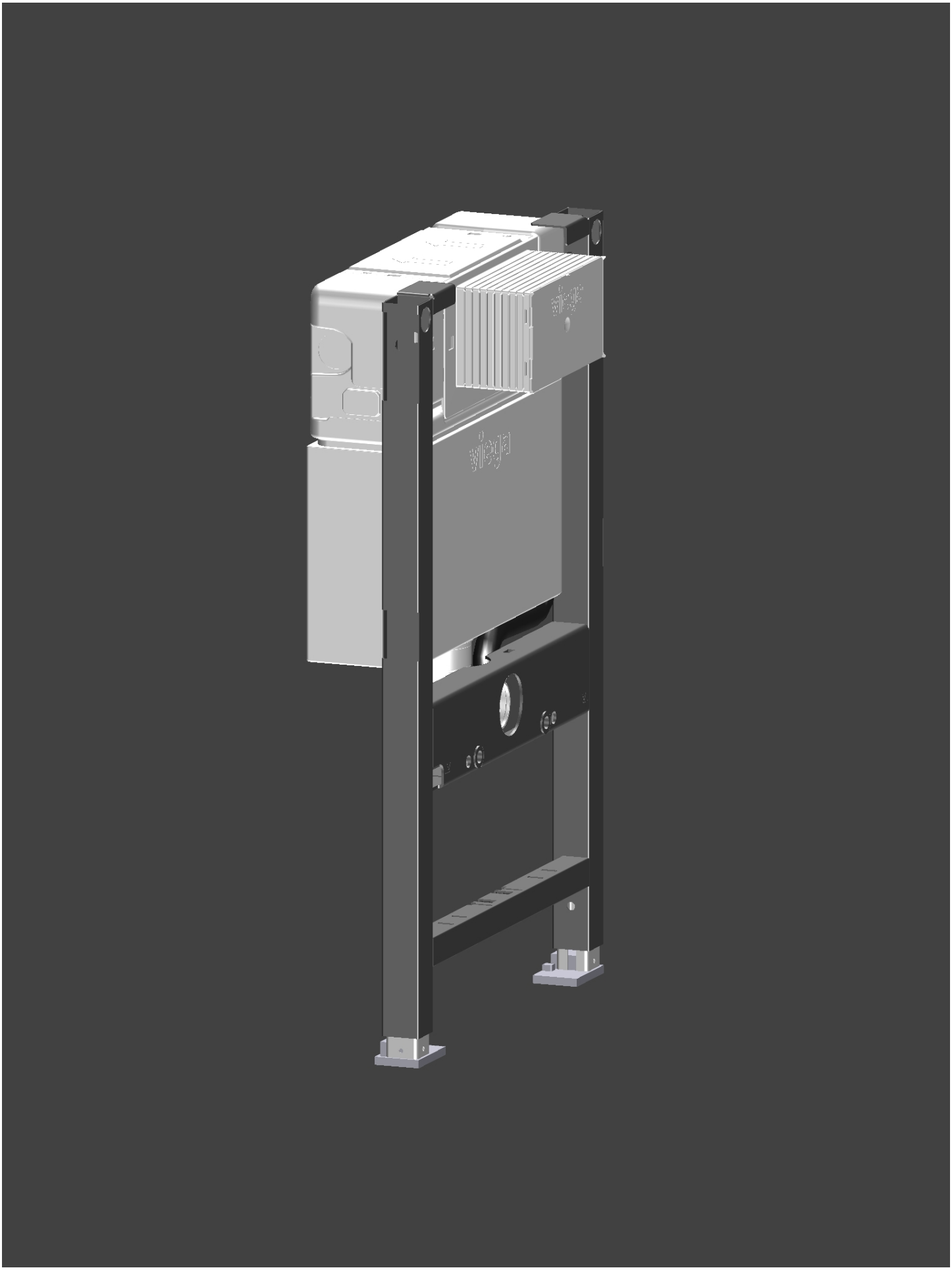

Date: September 14, 2023
Creator: TransMagic