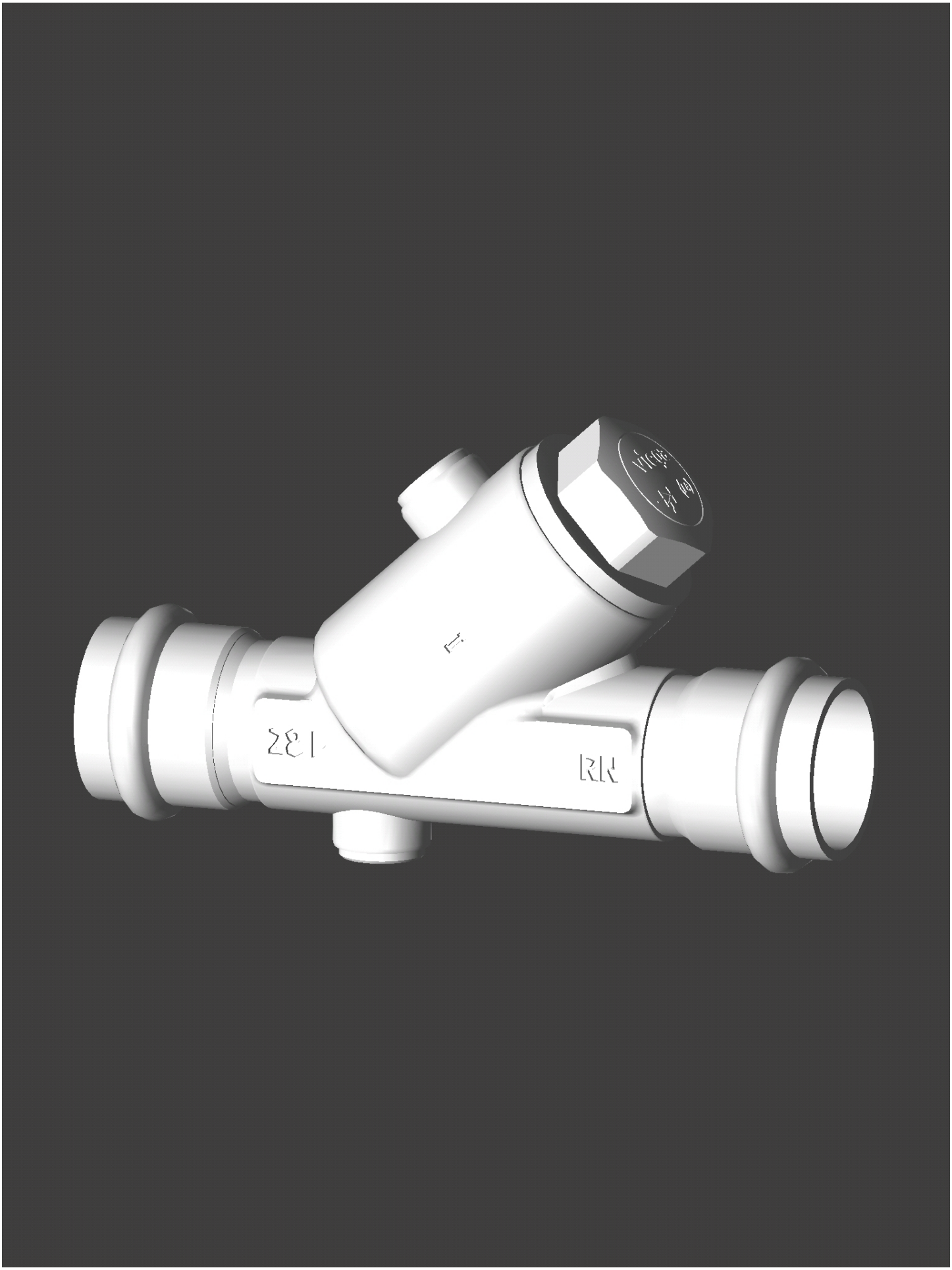

Date: Juni 28, 2017
Creator: TransMagic