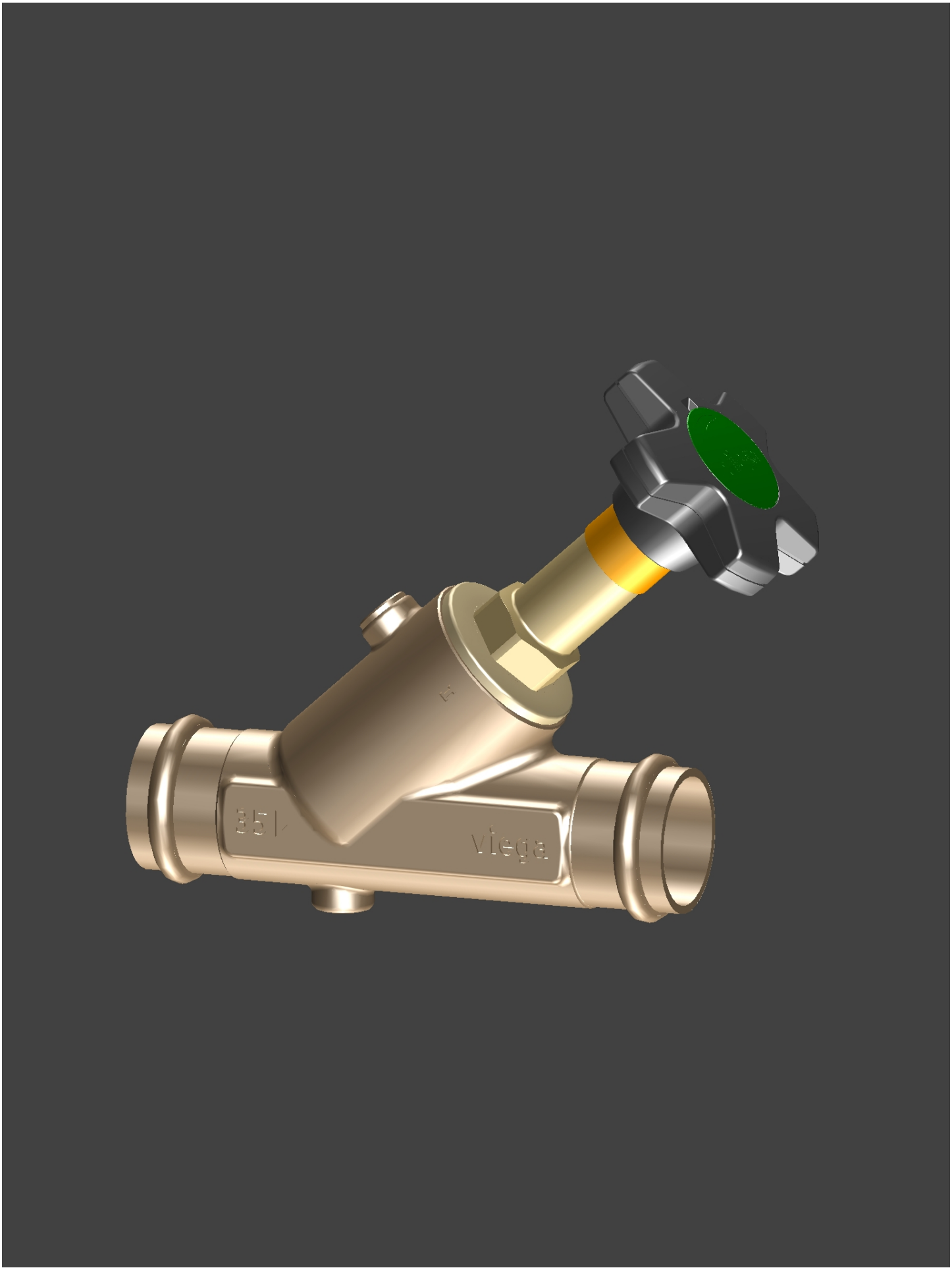

Date: December 01, 2023
Creator: TransMagic