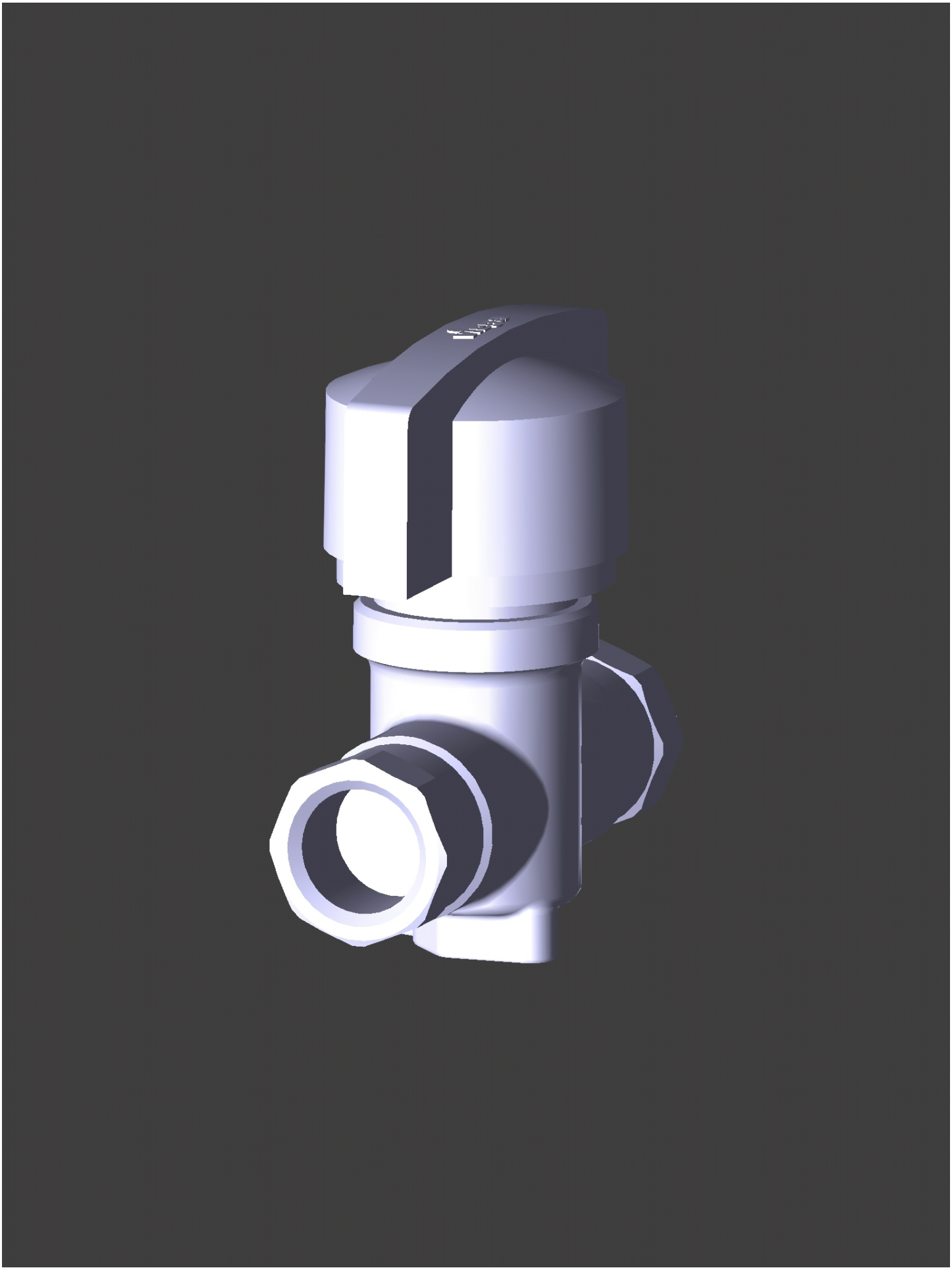

Date: September 10, 2018
Creator: TransMagic