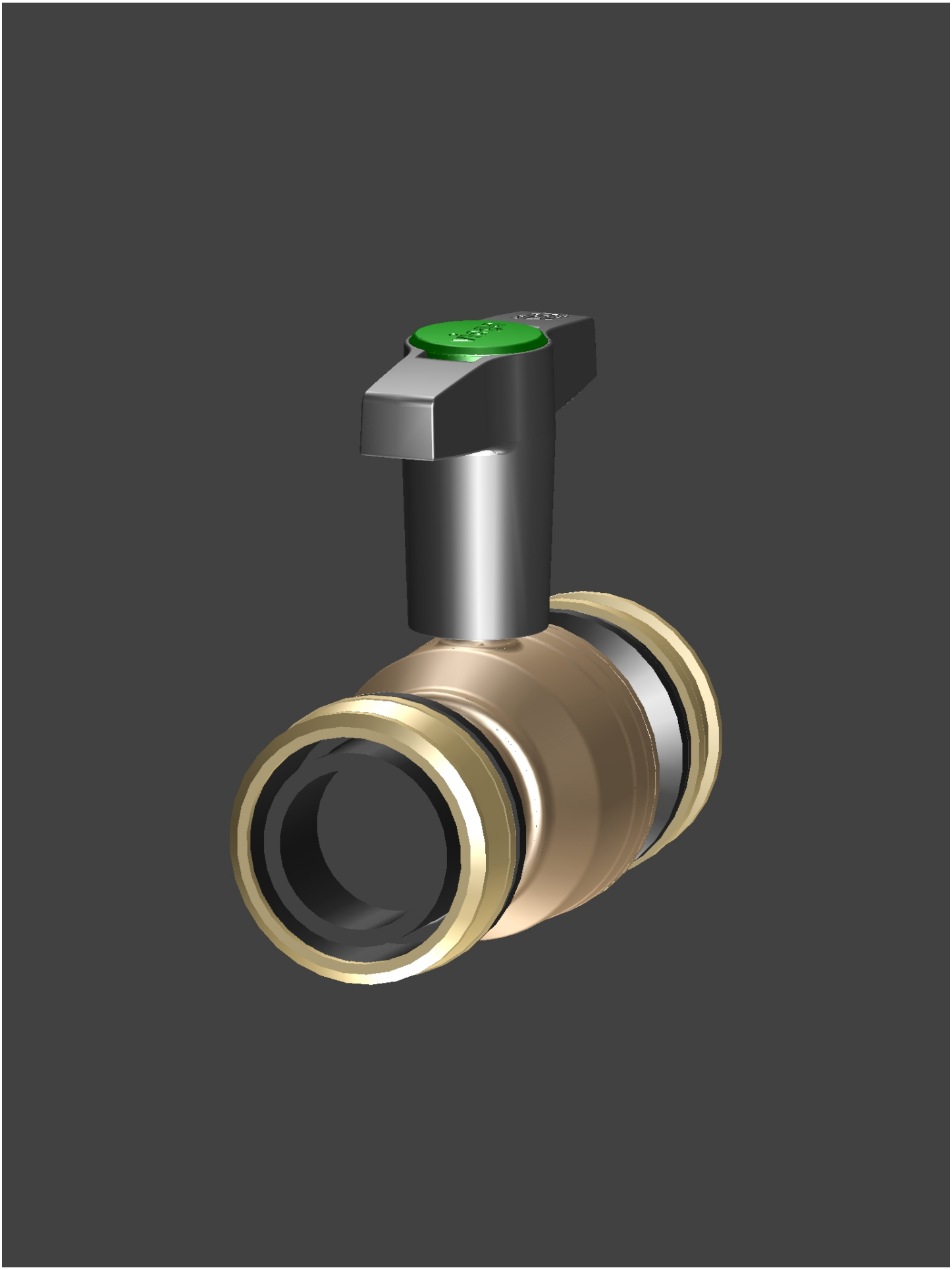

Date: August 22, 2023
Creator: TransMagic