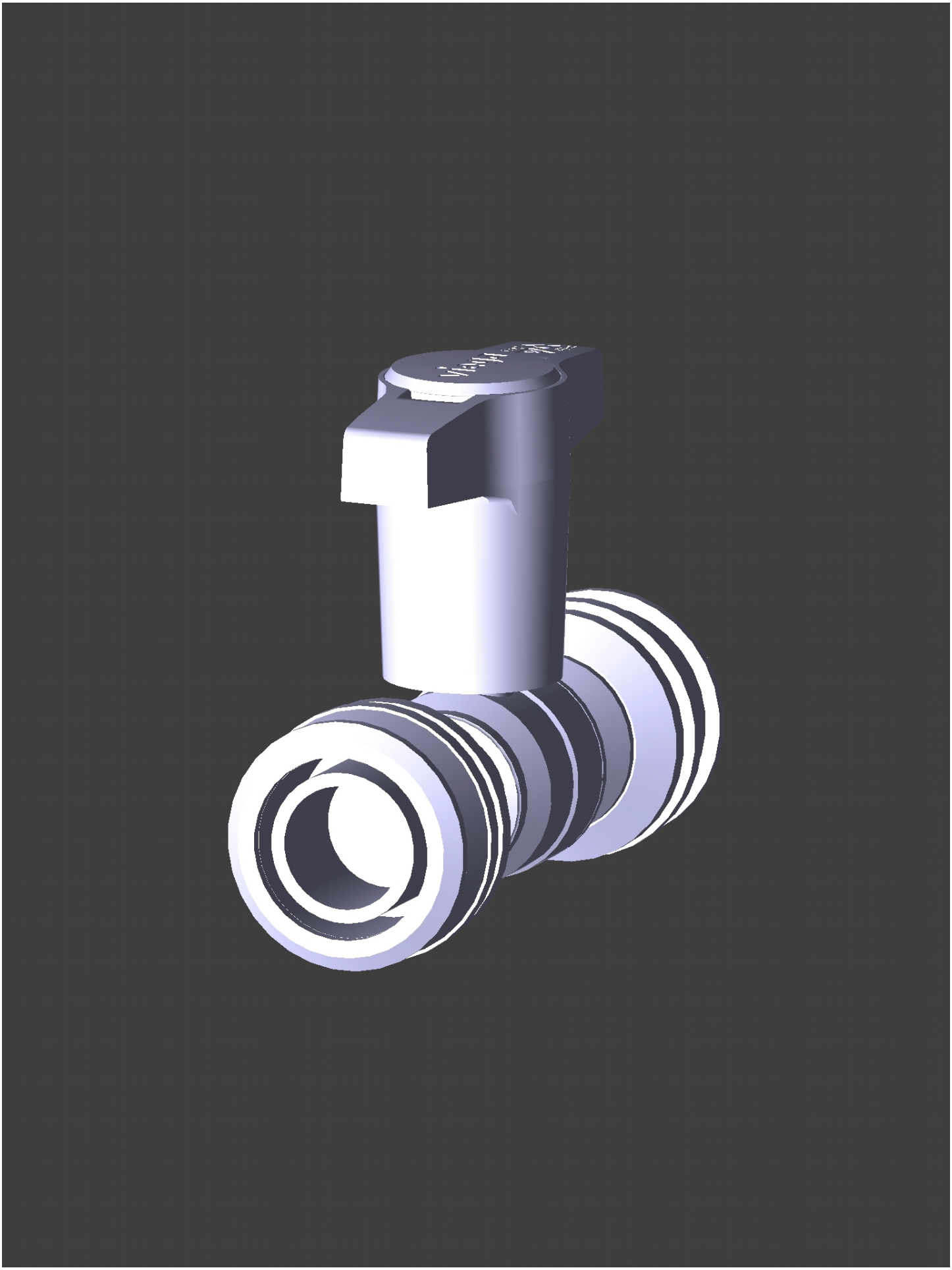

Date: April 26, 2017
Creator: TransMagic