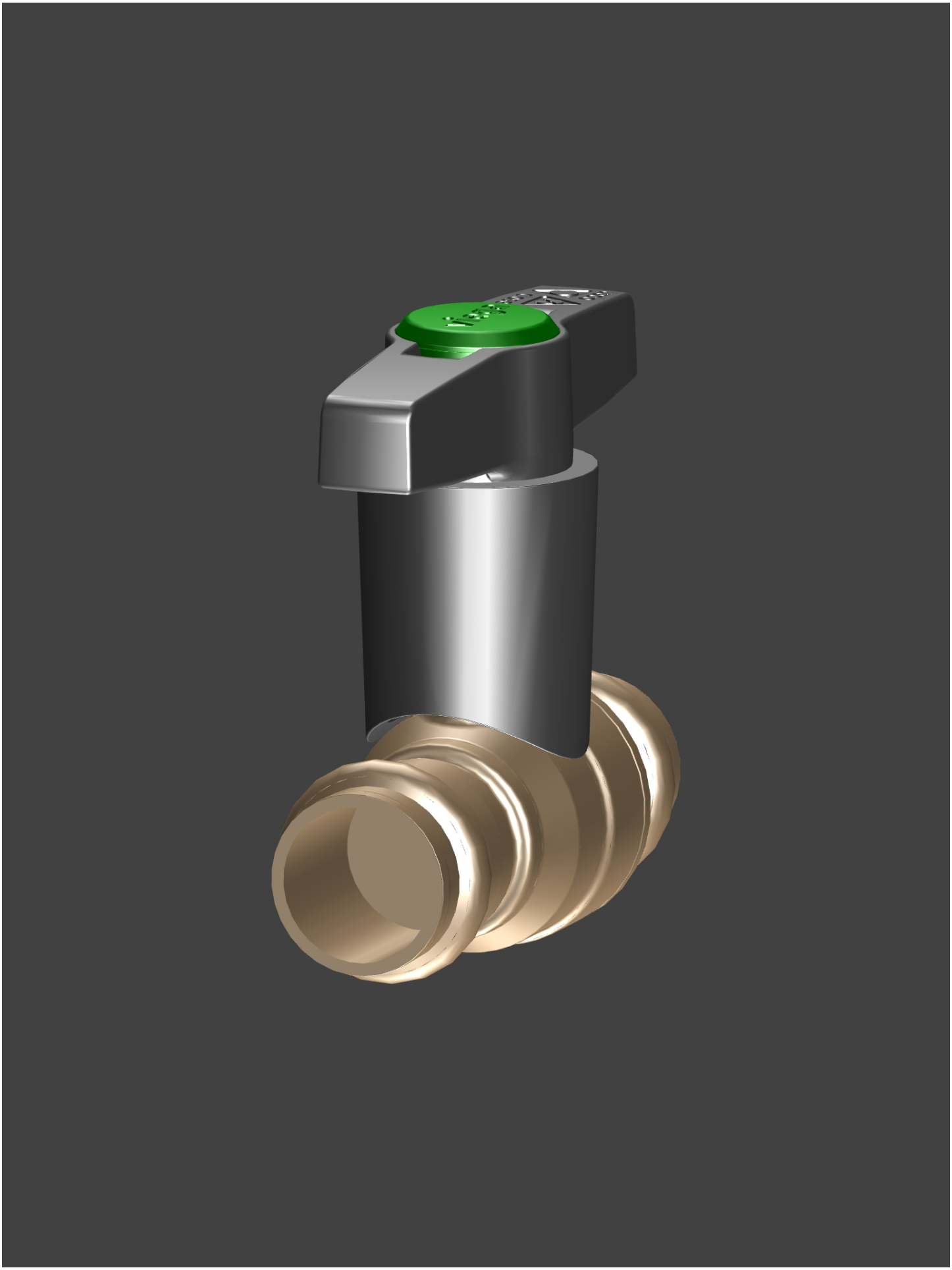

Date: August 17, 2021
Creator: TransMagic