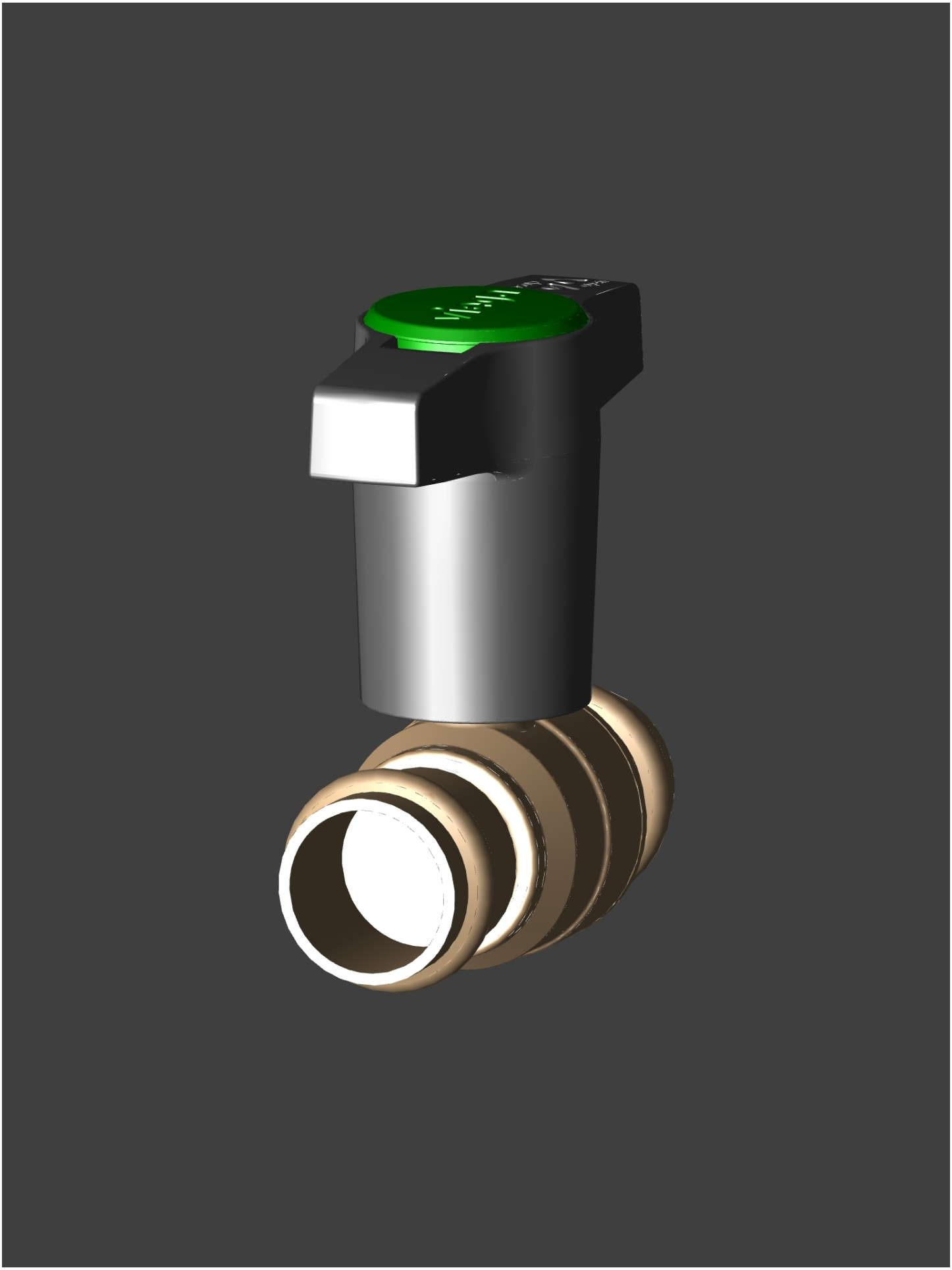

Date: May 15, 2020
Creator: TransMagic