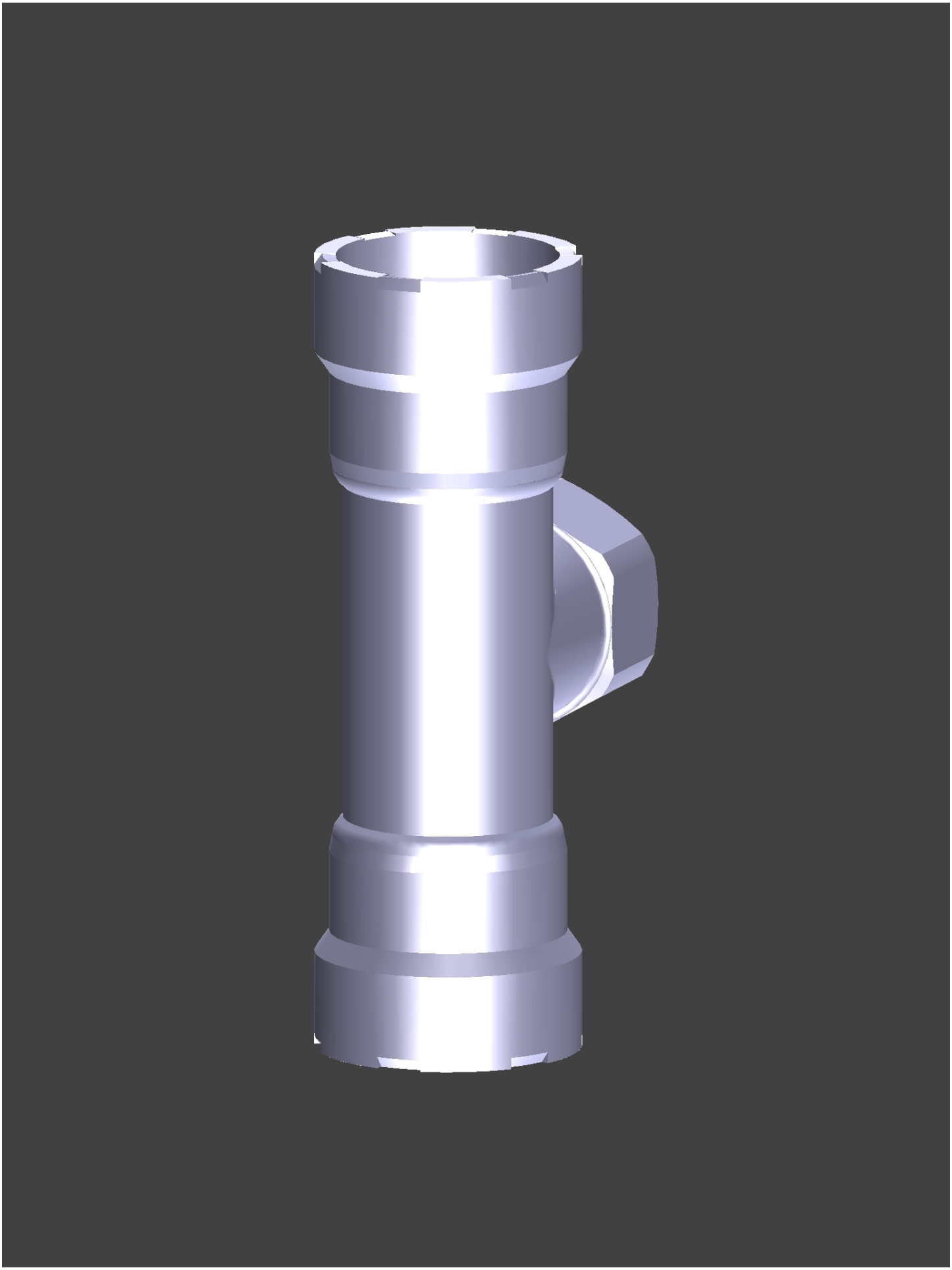

Date: December 07, 2022
Creator: TransMagic