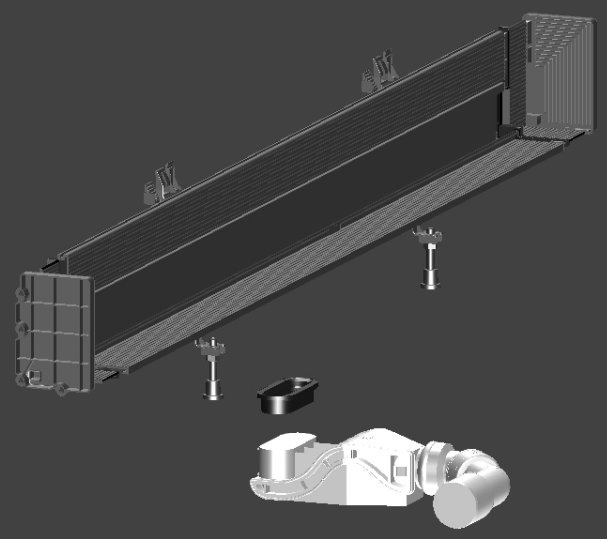

Date: February 27, 2024
Creator: TransMagic