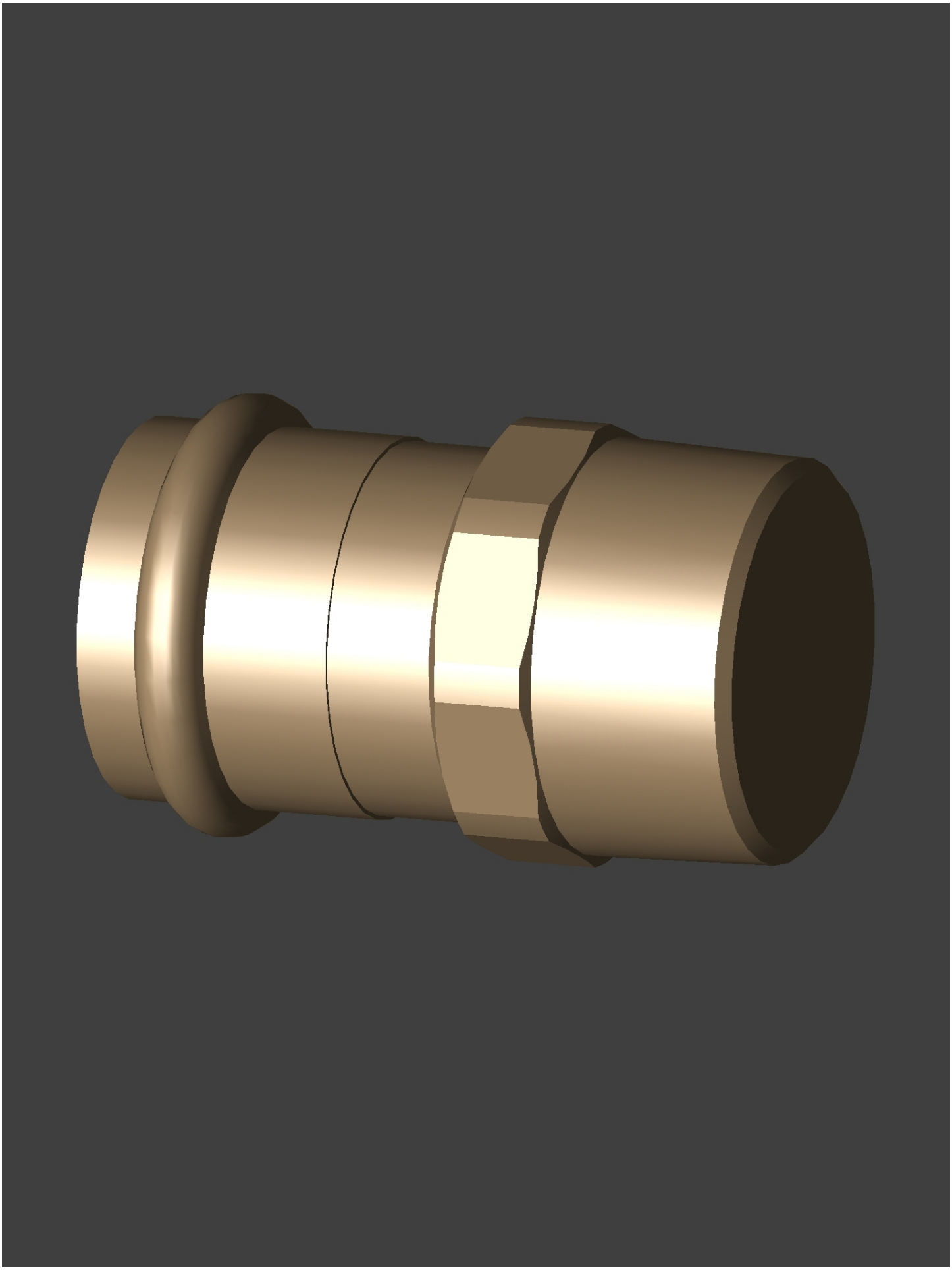

Date: July 16, 2015
Creator: TransMagic