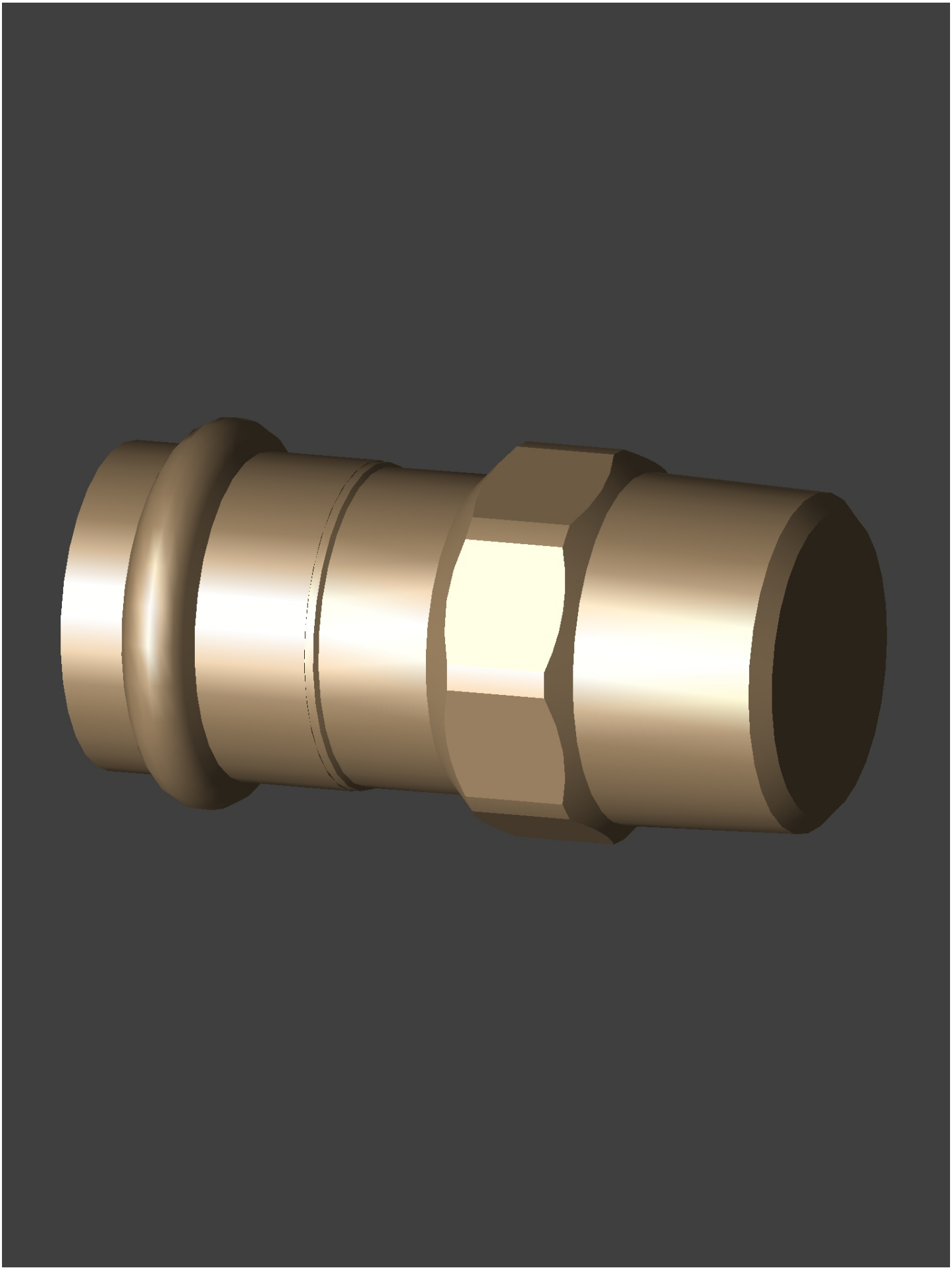

Date: June 03, 2015
Creator: TransMagic