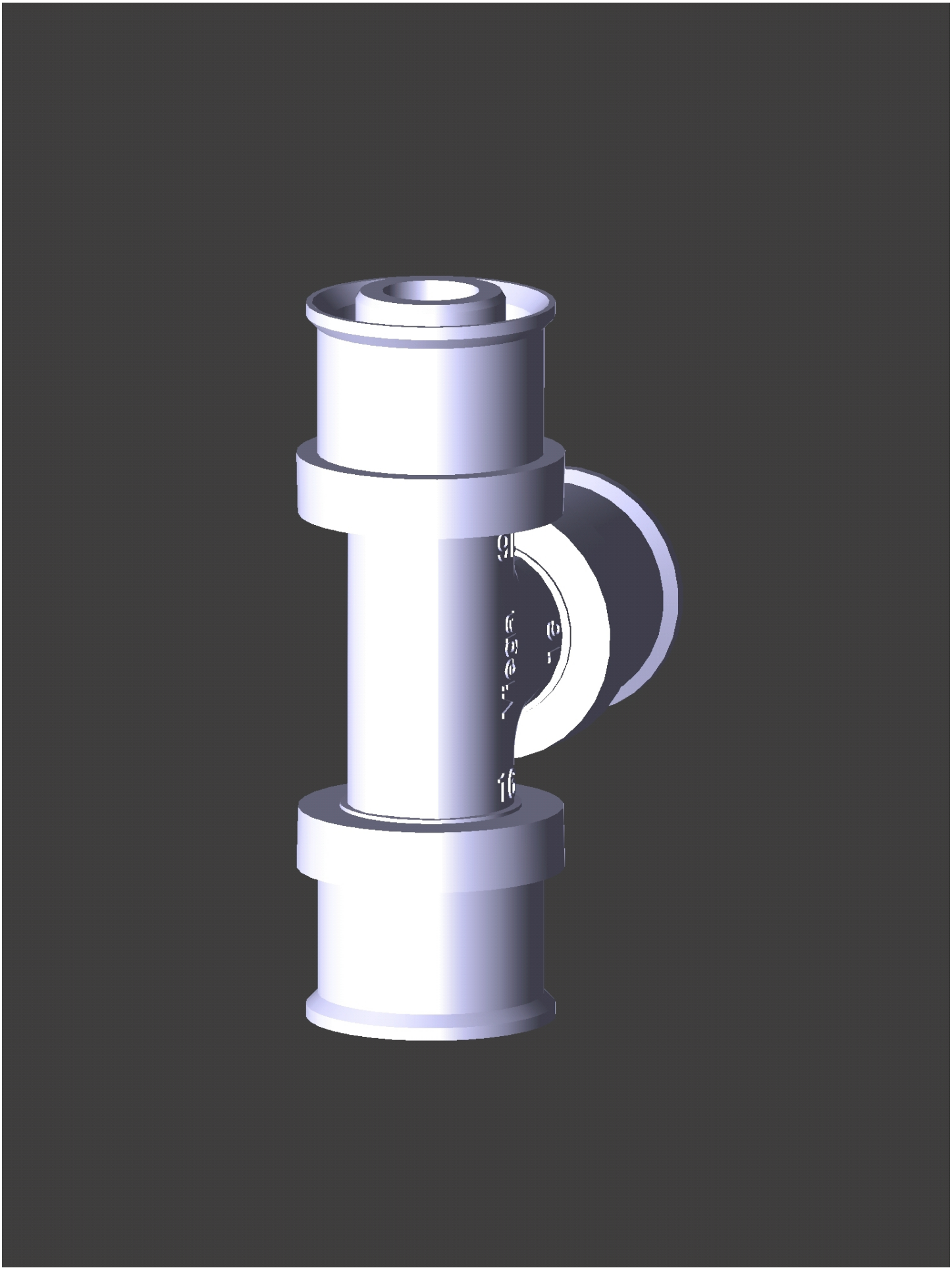

Date: Januar 11, 2019
Creator: TransMagic