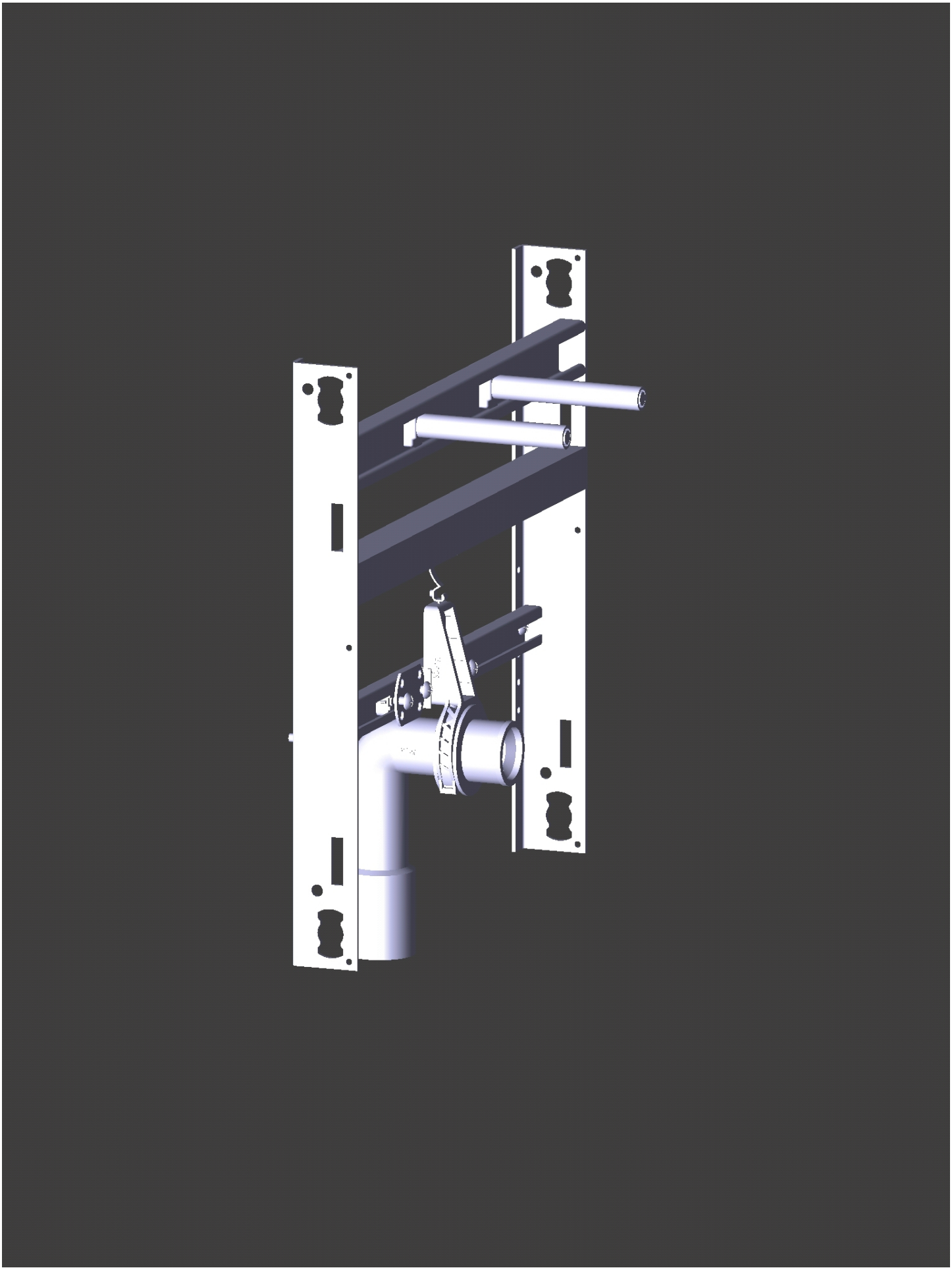

Date: Mai 19, 2017
Creator: TransMagic