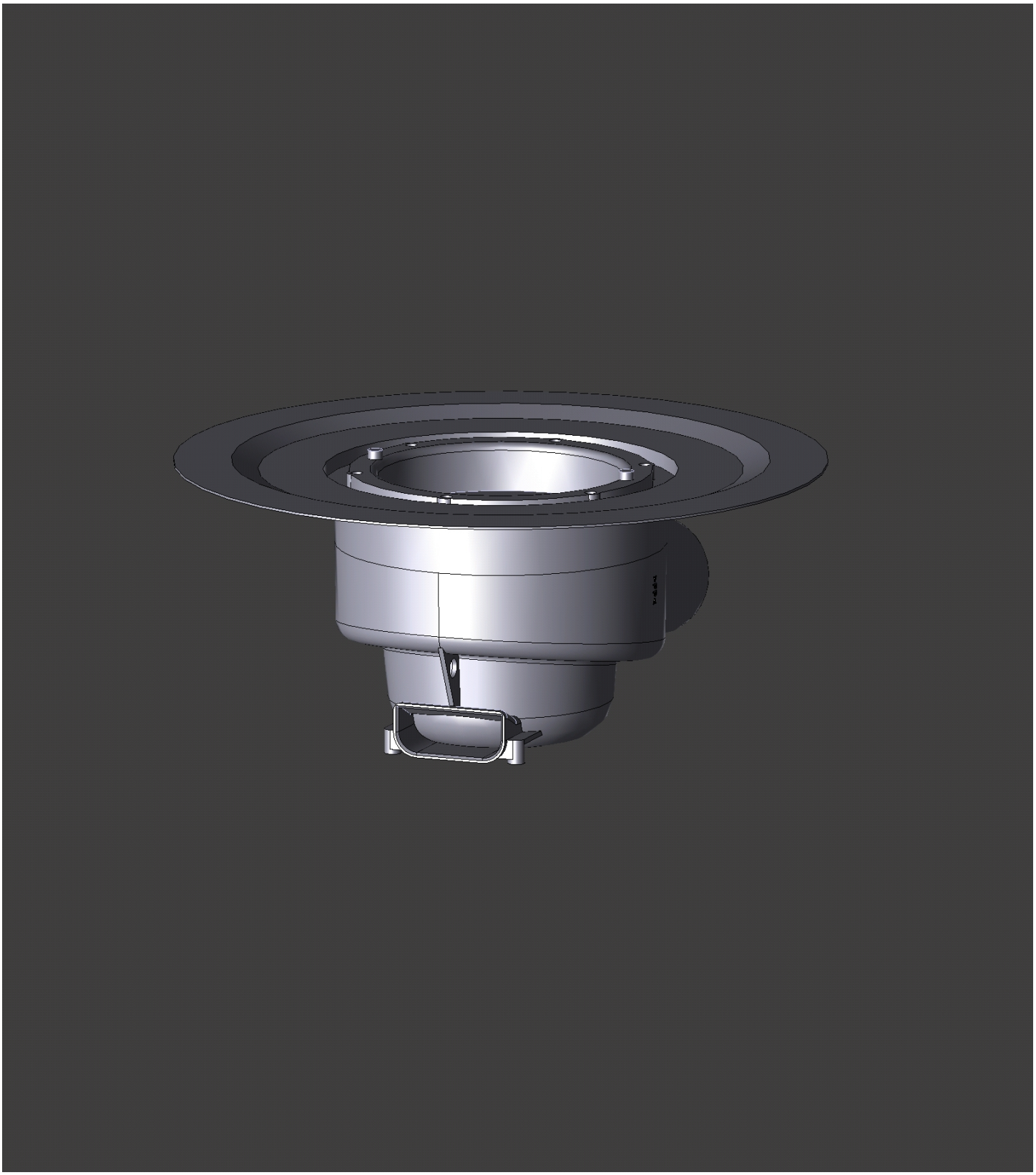

Filename: pim0008513.pdf
Date: September 29, 2015
Creator: TransMagic