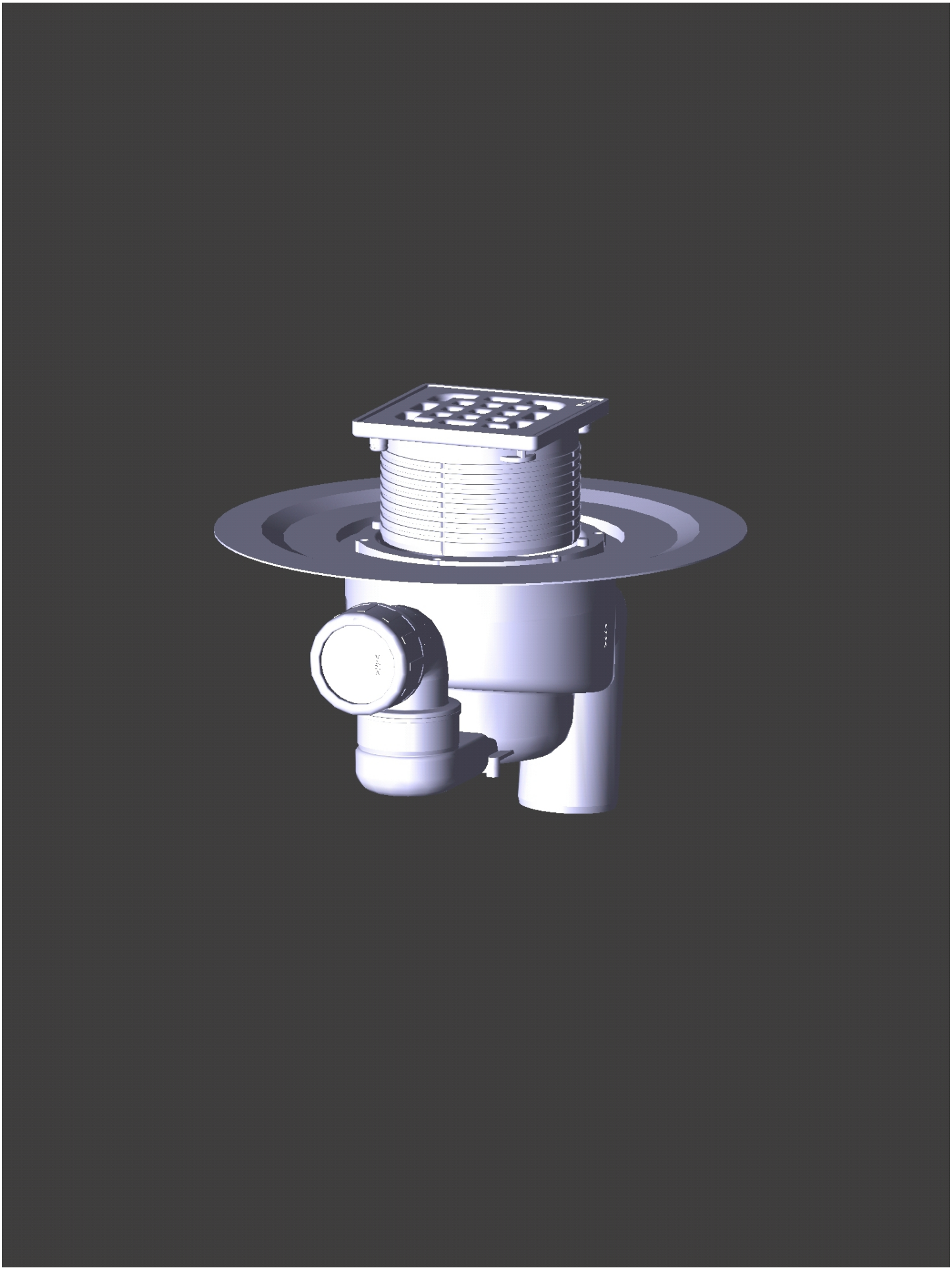

Date: September 11, 2018
Creator: TransMagic