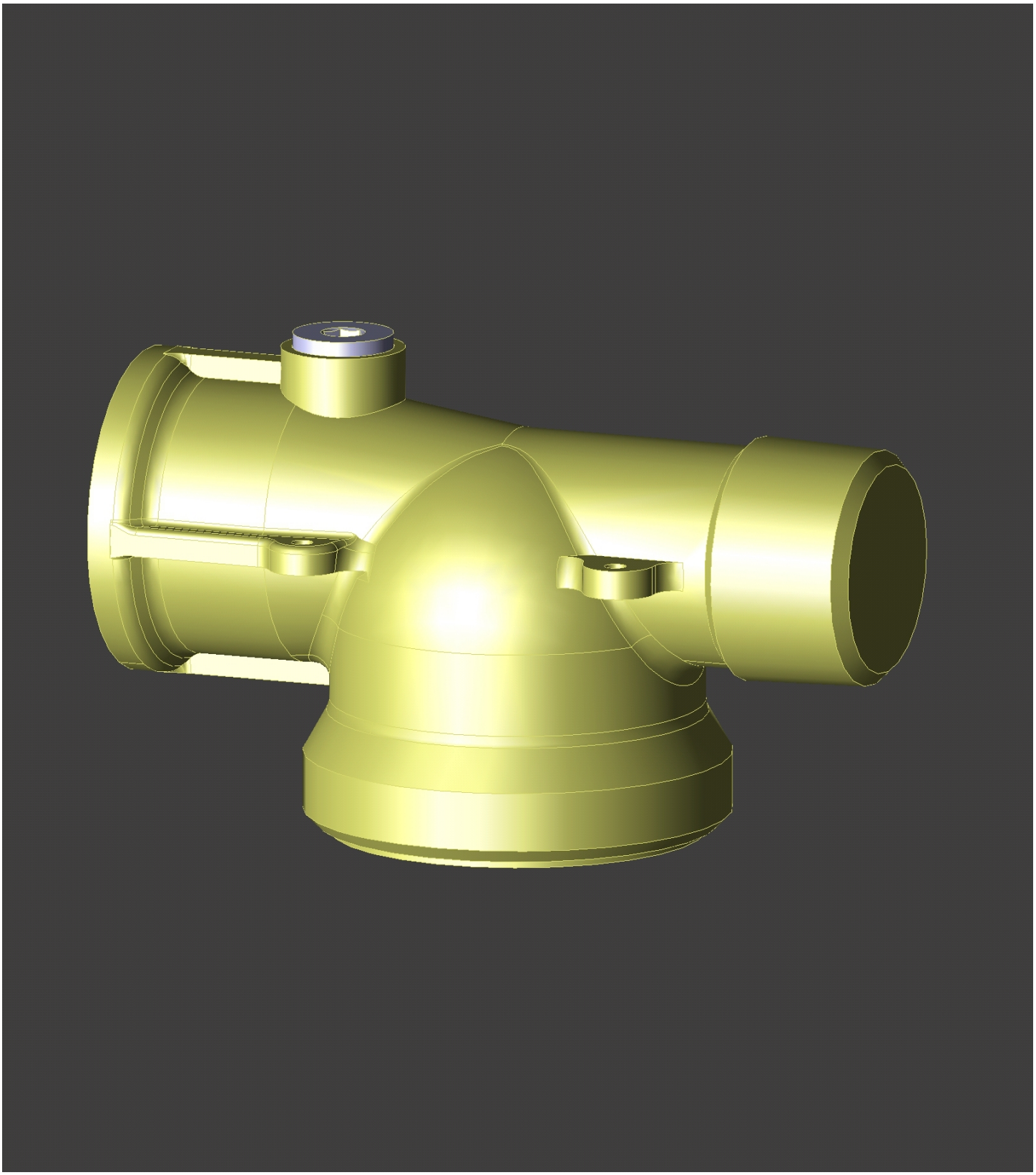

Filename: pim0009089.pdf
Date: September 21, 2015
Creator: TransMagic