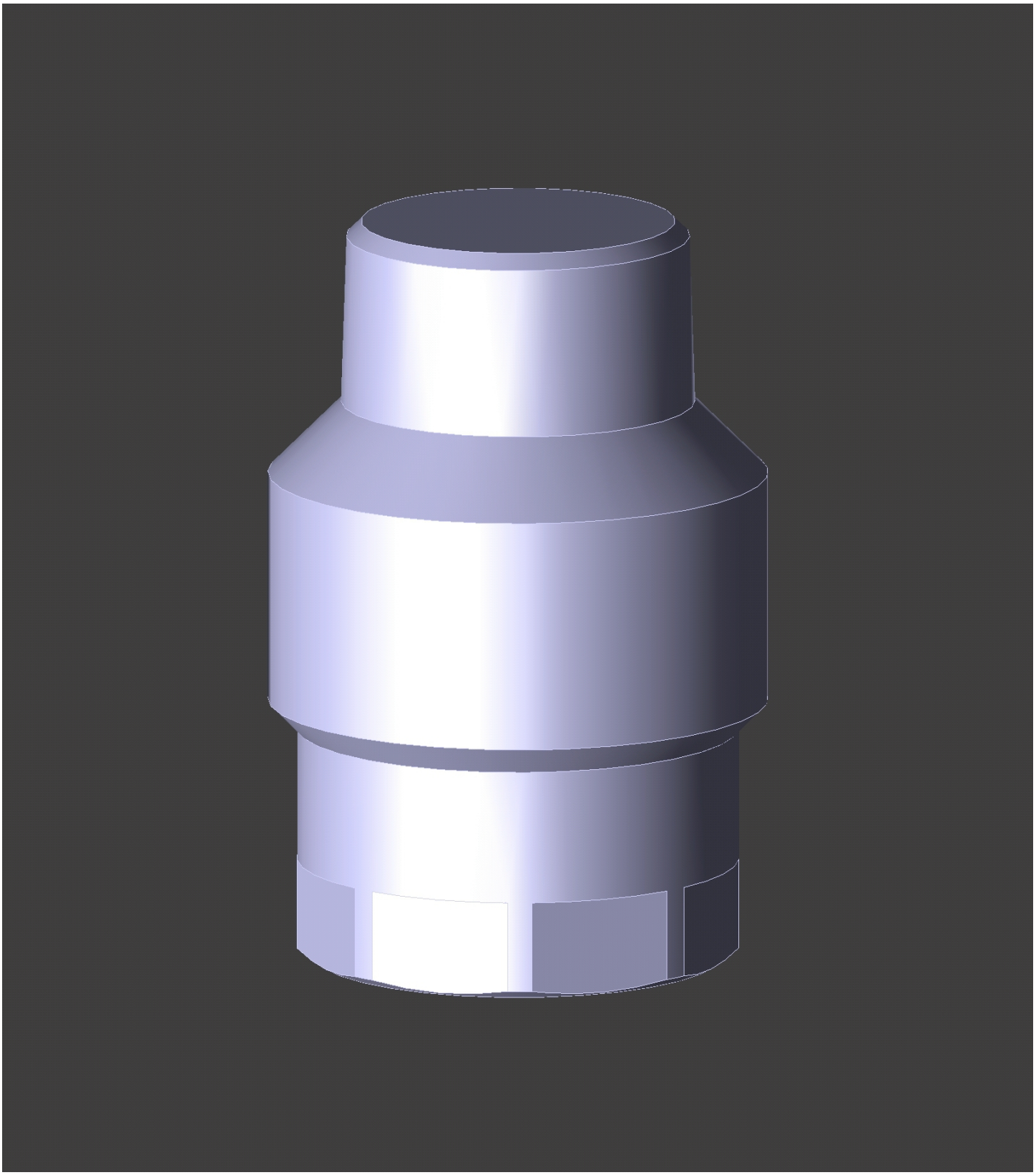

Filename: pim0004257.pdf
Date: September 18, 2015
Creator: TransMagic