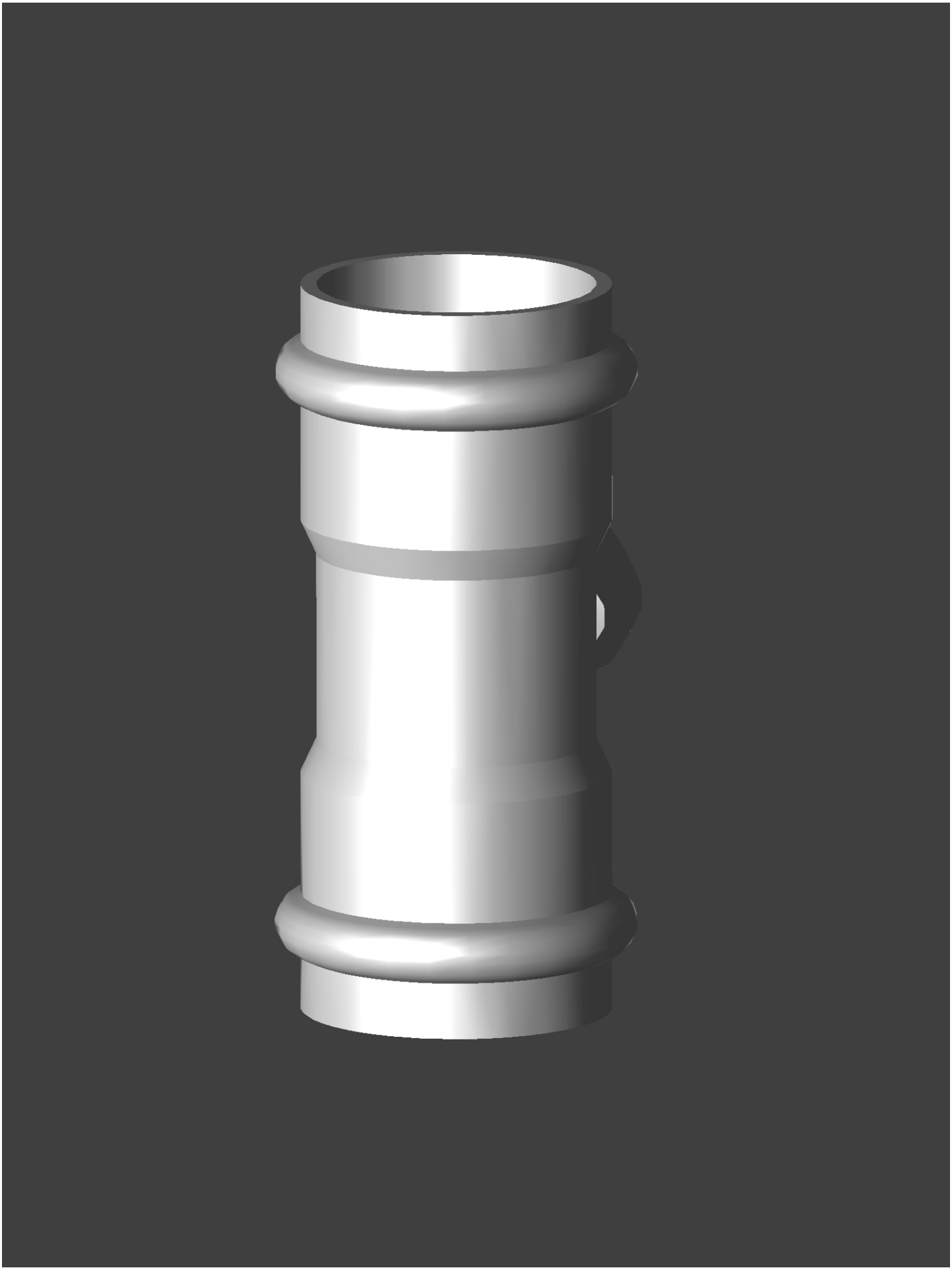

Date: March 19, 2015
Creator: TransMagic