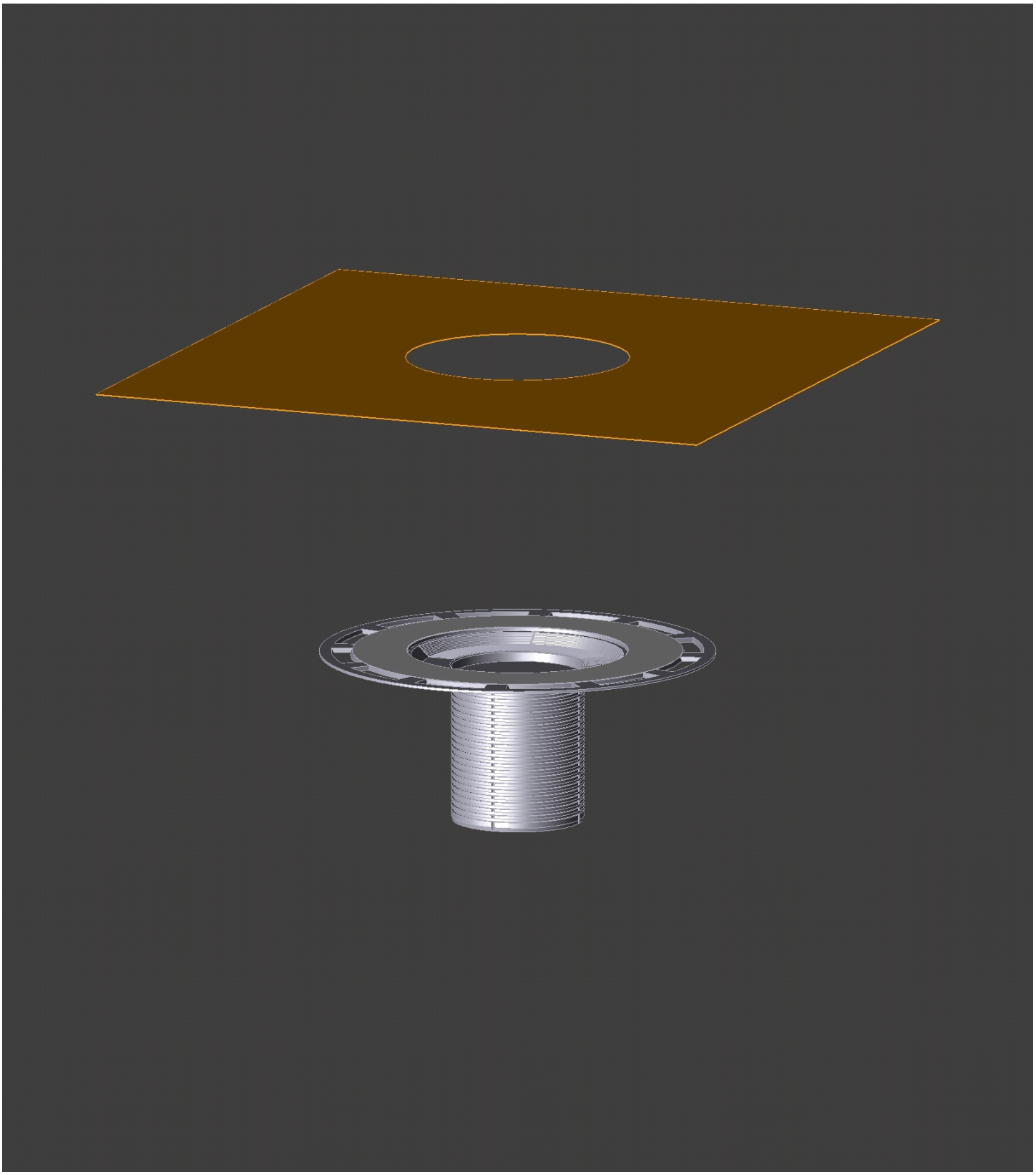

Filename: pim0011743.pdf
Date: June 09, 2016
Creator: TransMagic