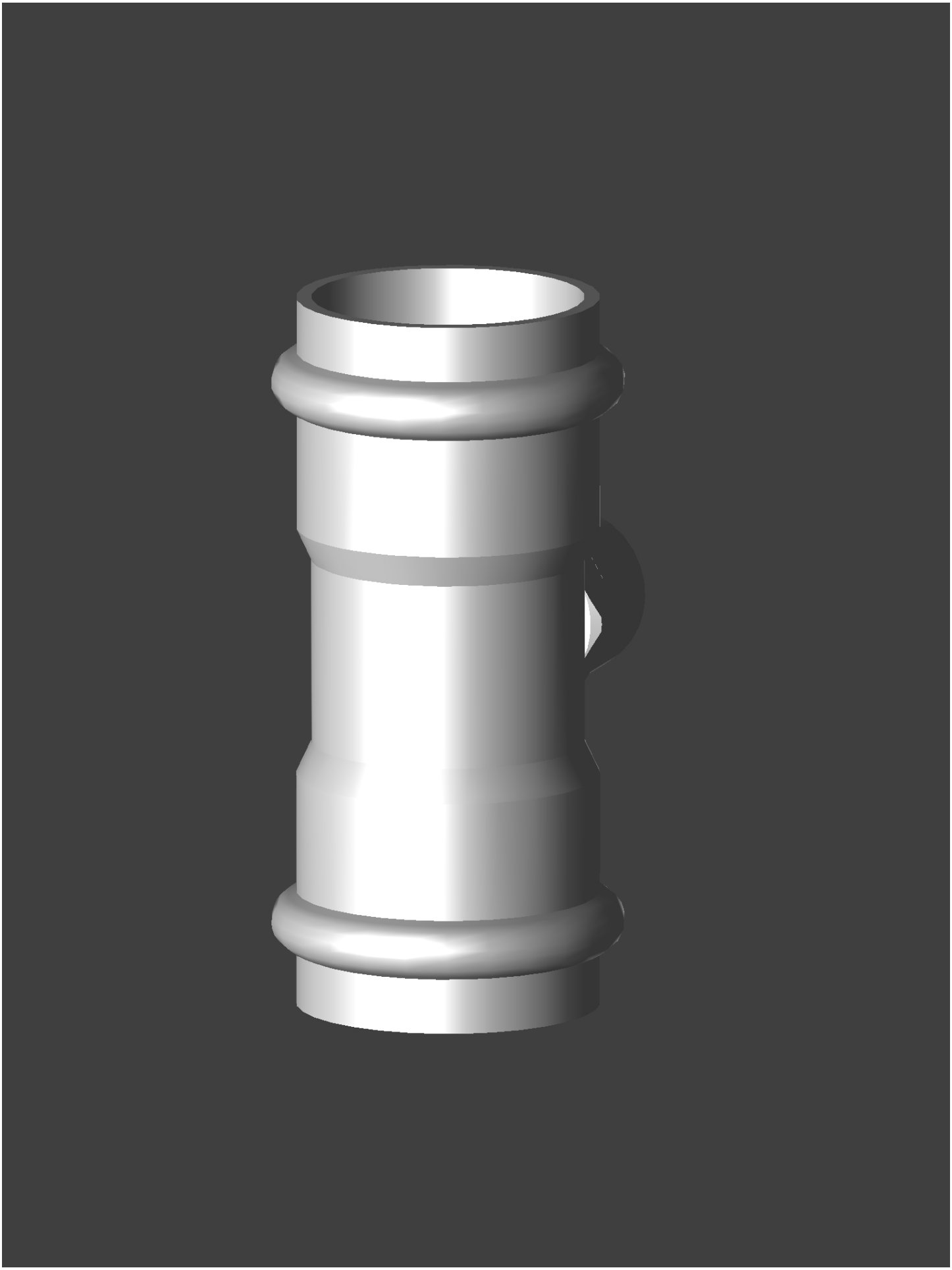

Date: March 23, 2015
Creator: TransMagic