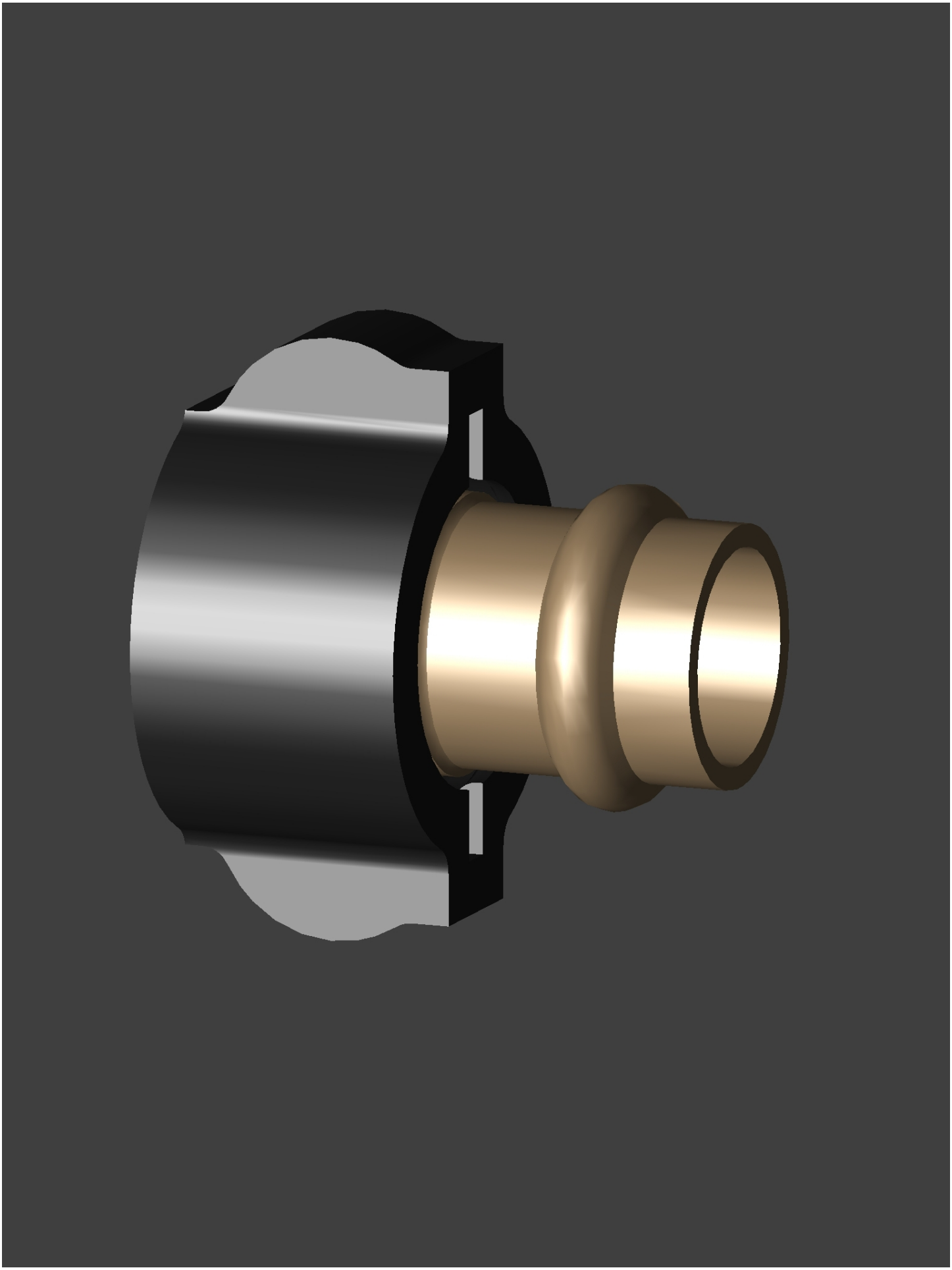

Date: March 18, 2015
Creator: TransMagic