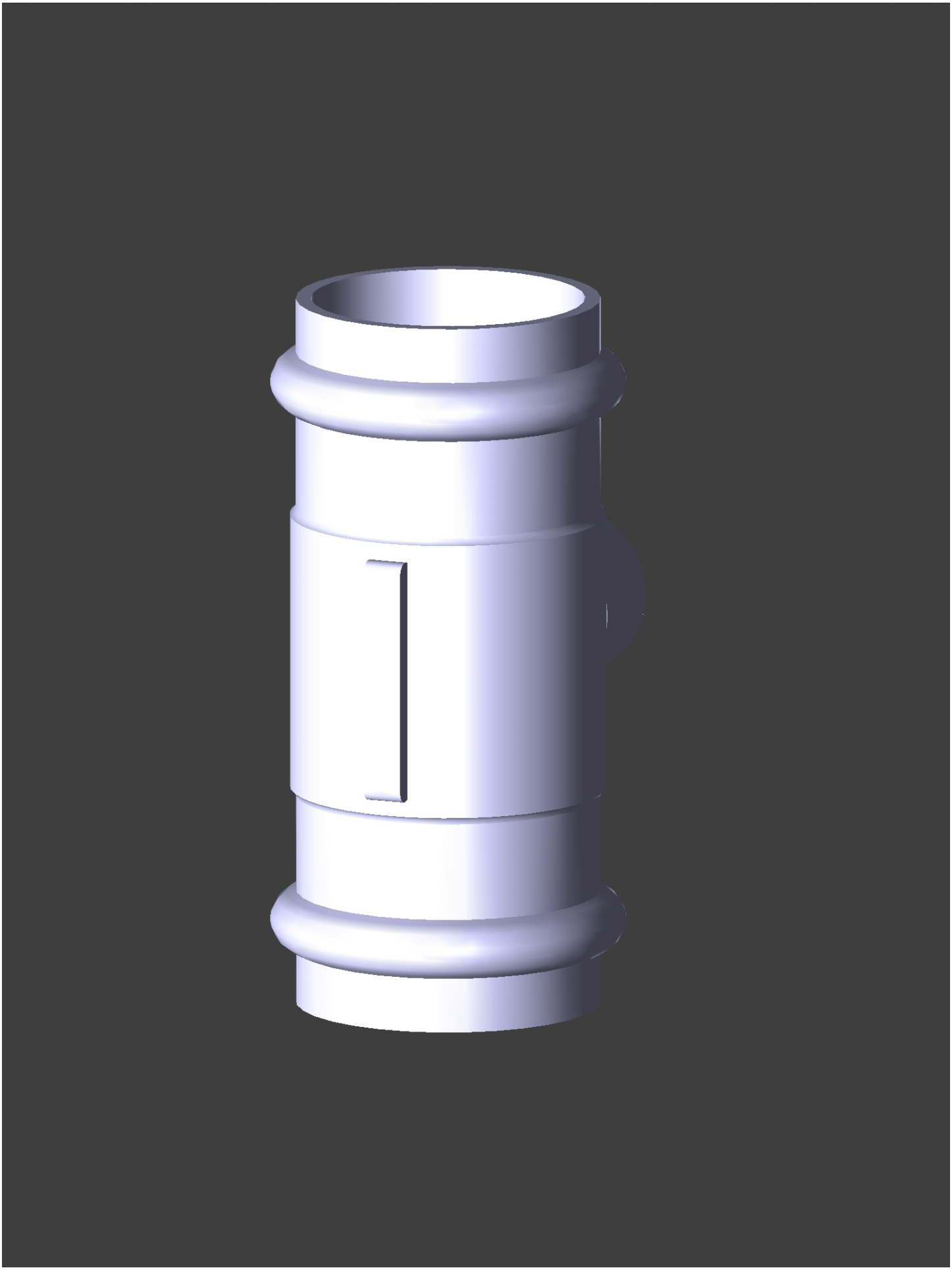

Date: Mai 17, 2017
Creator: TransMagic