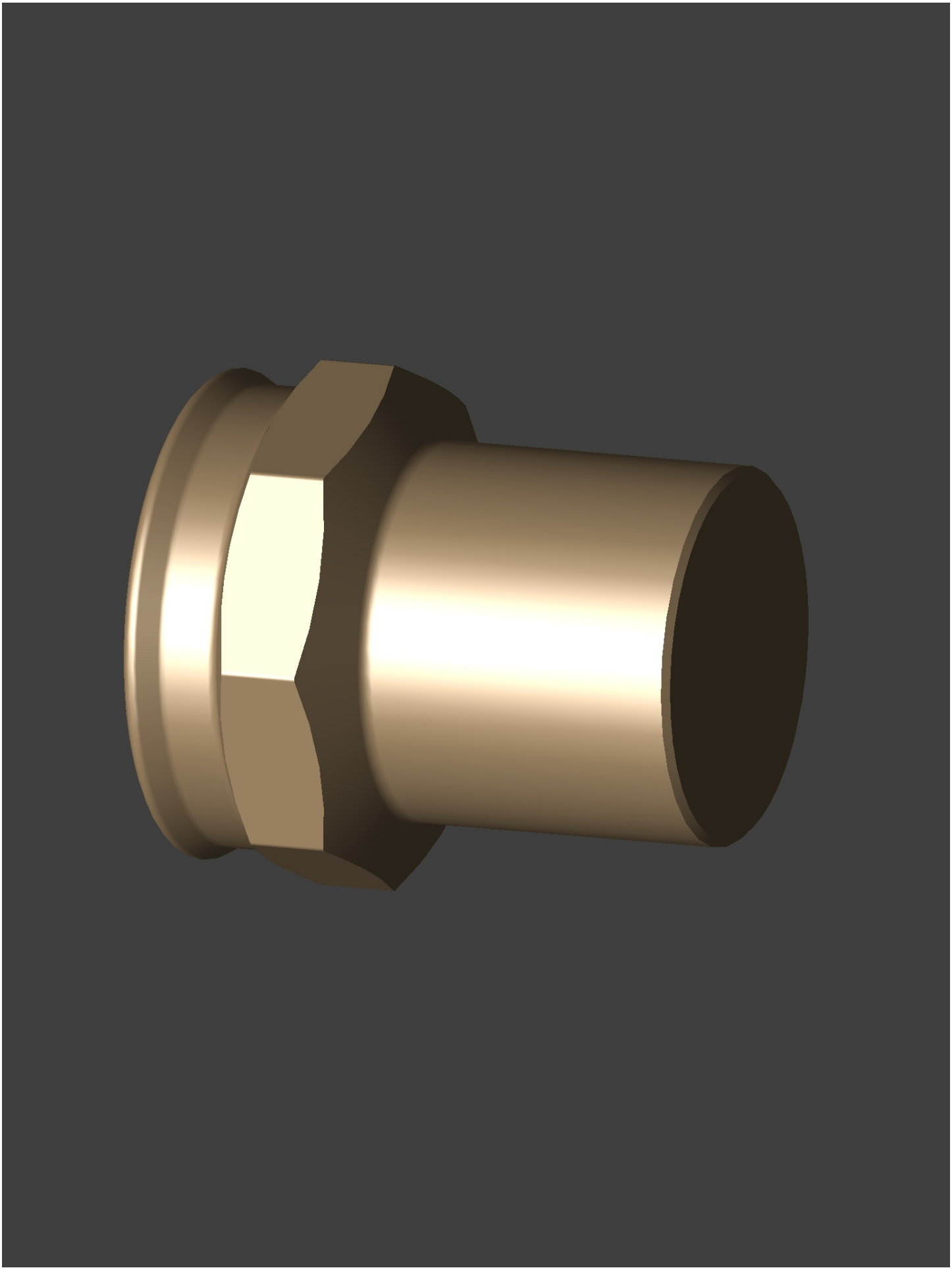

Date: May 04, 2015
Creator: TransMagic