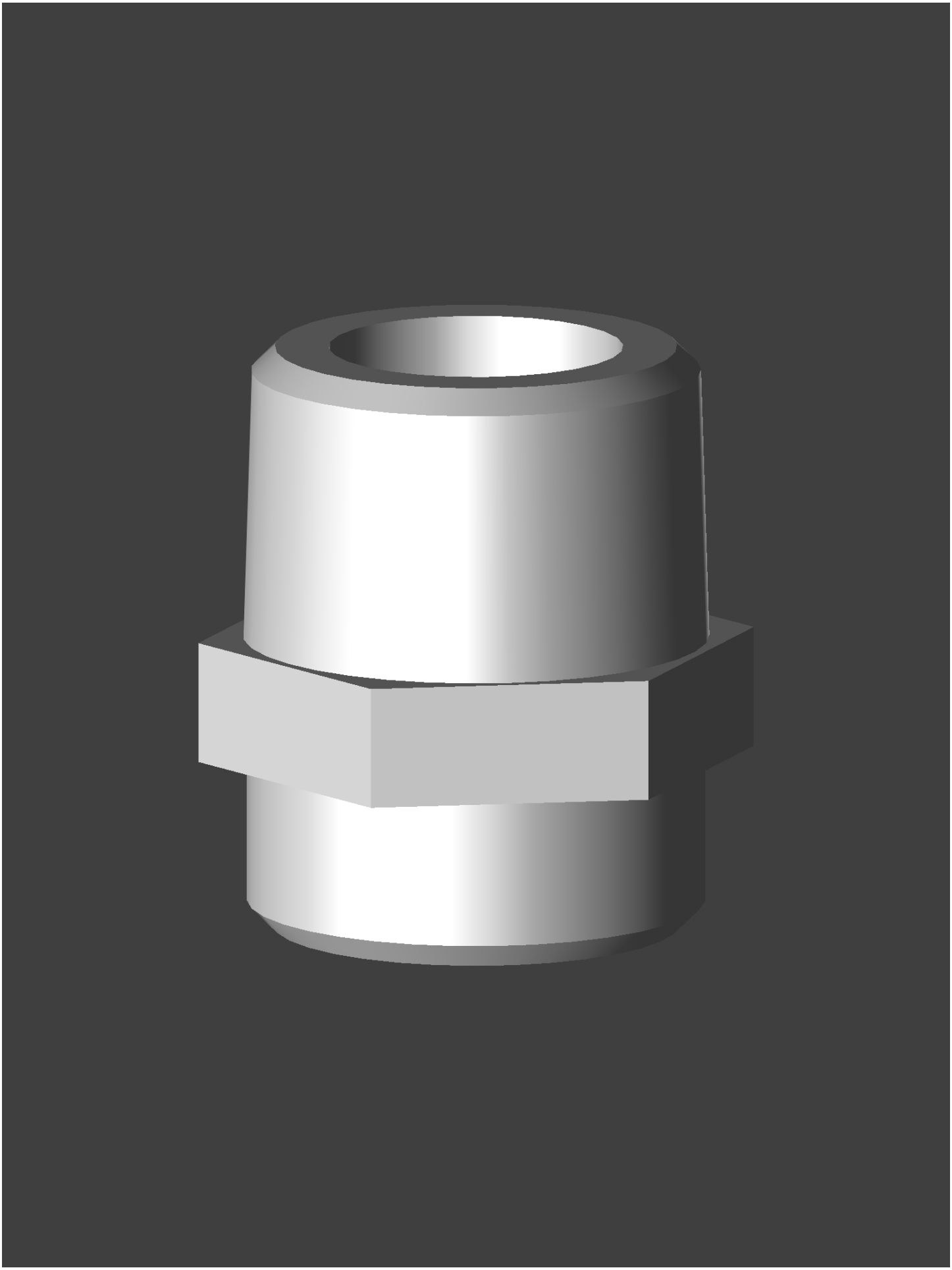

Date: June 18, 2015
Creator: TransMagic