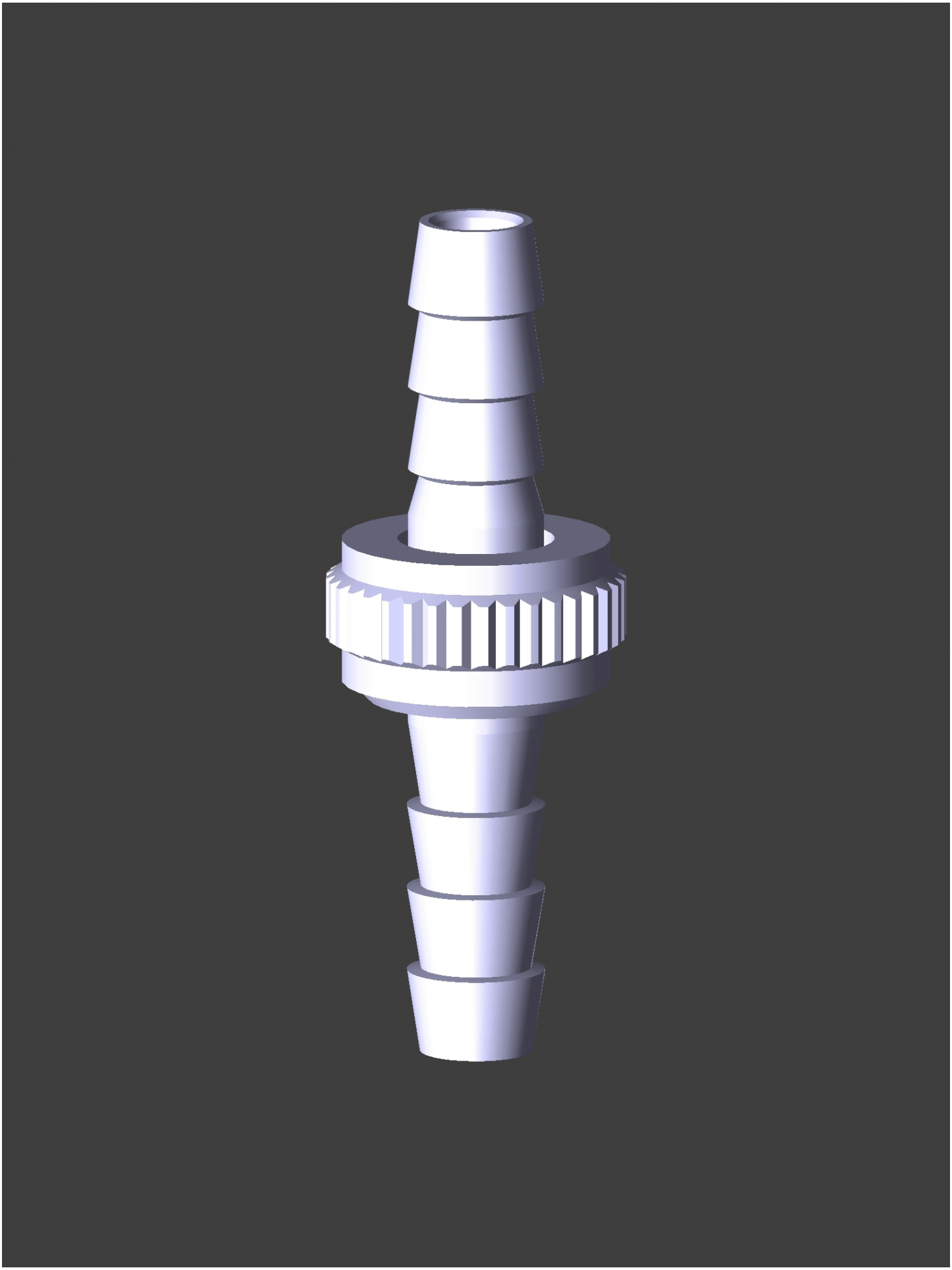

Date: Juli 26, 2016
Creator: TransMagic