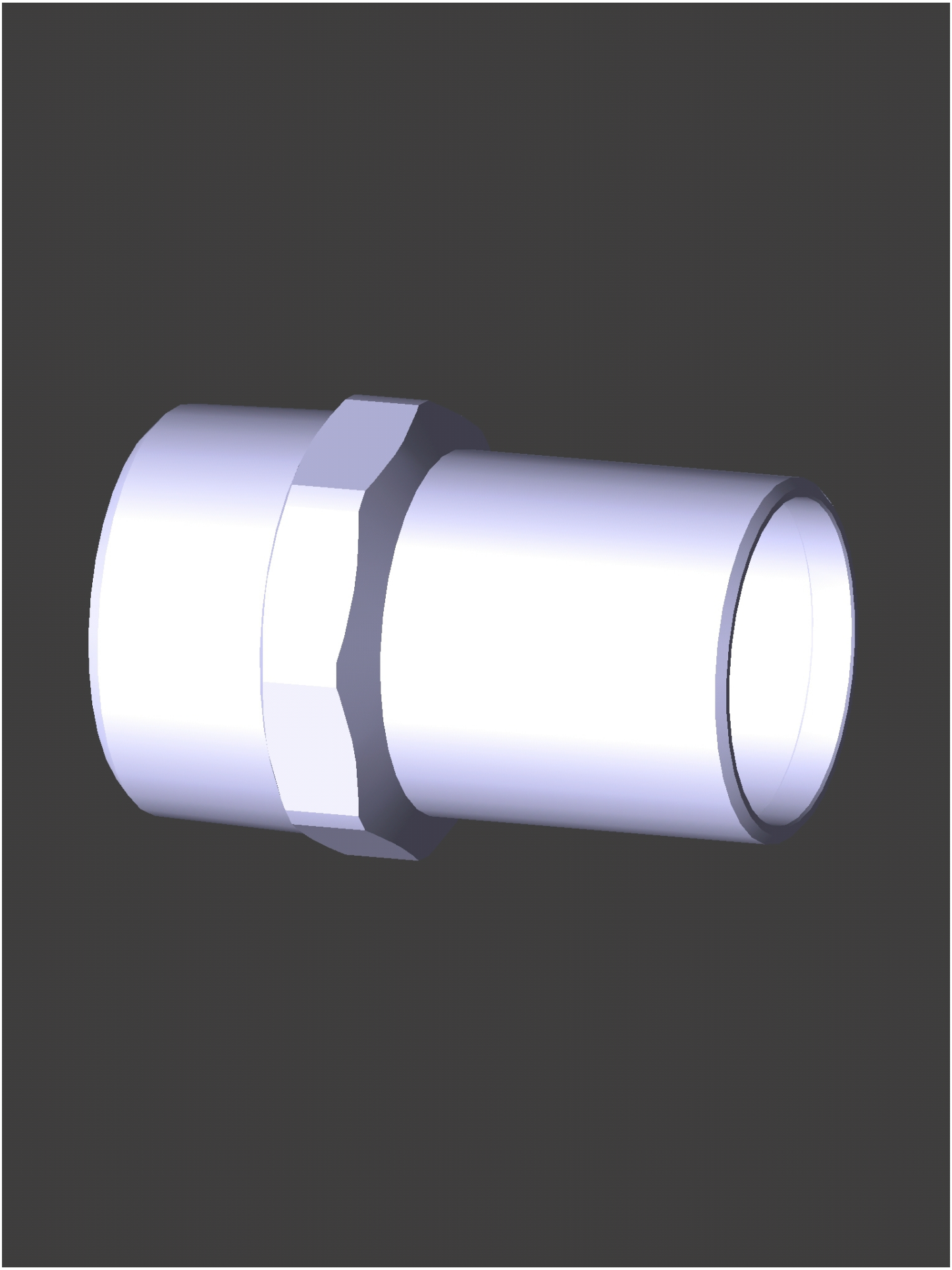

Date: Juli 06, 2016
Creator: TransMagic