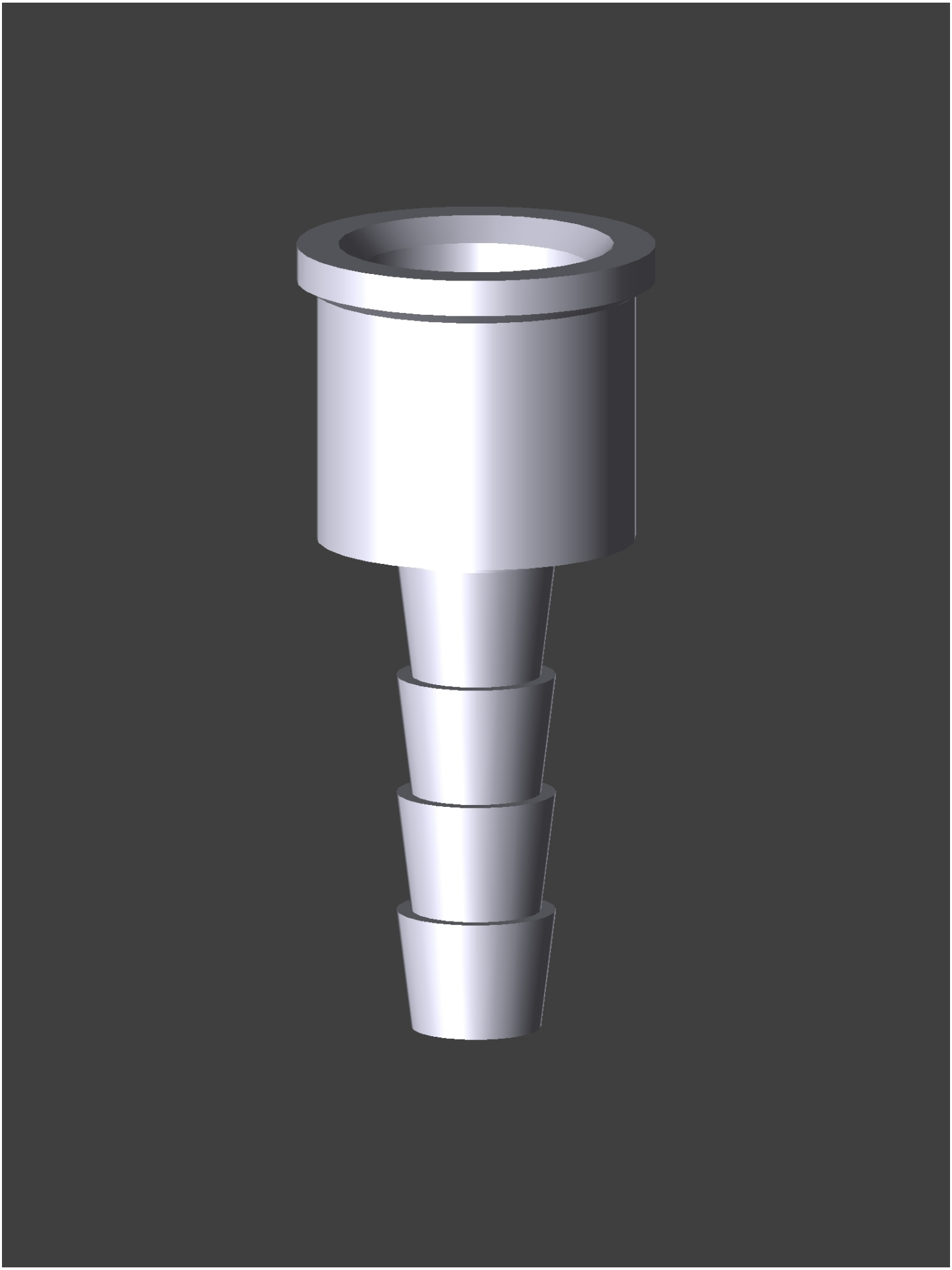

Date: May 18, 2015
Creator: TransMagic