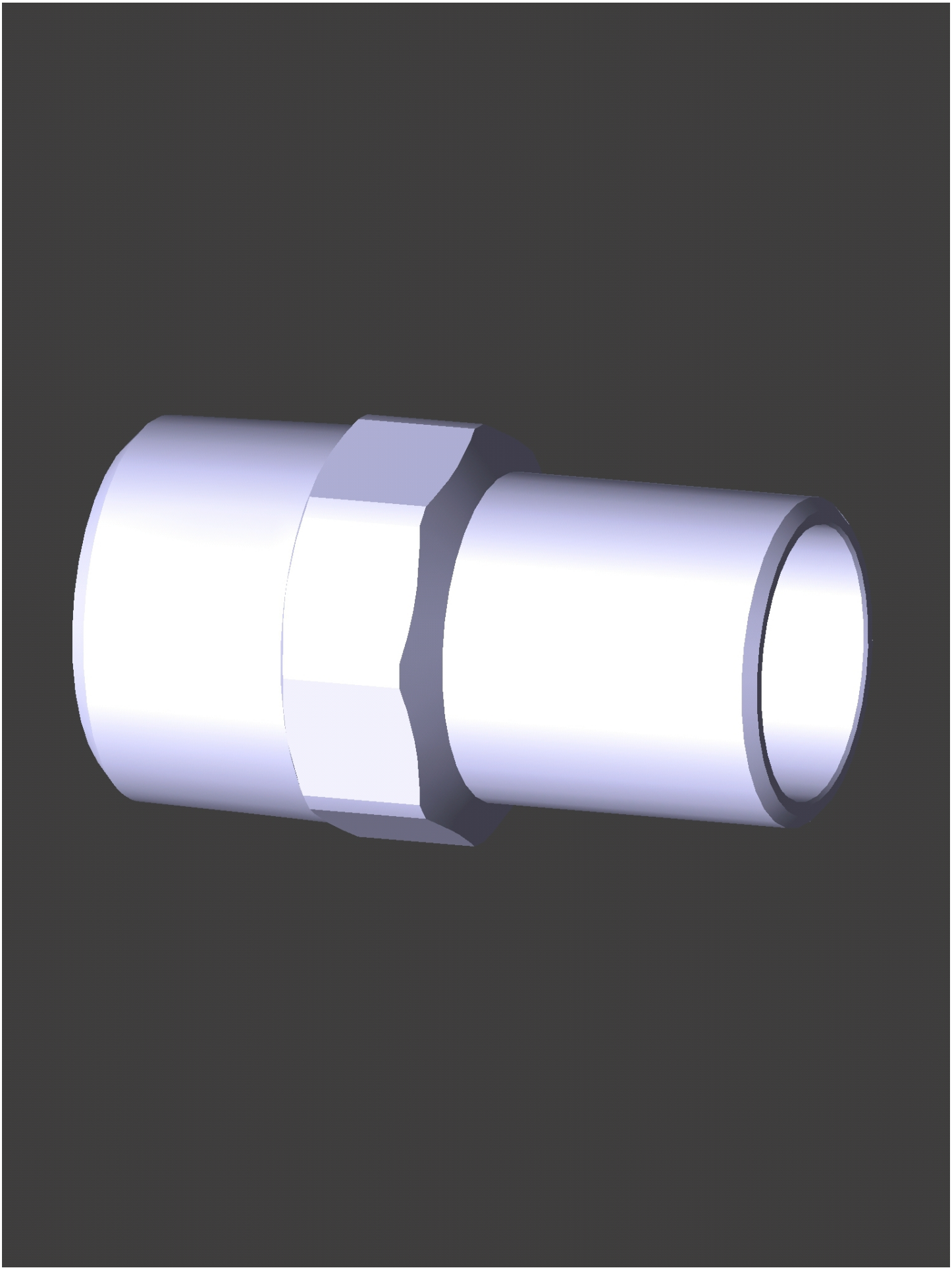

Date: Januar 25, 2017
Creator: TransMagic