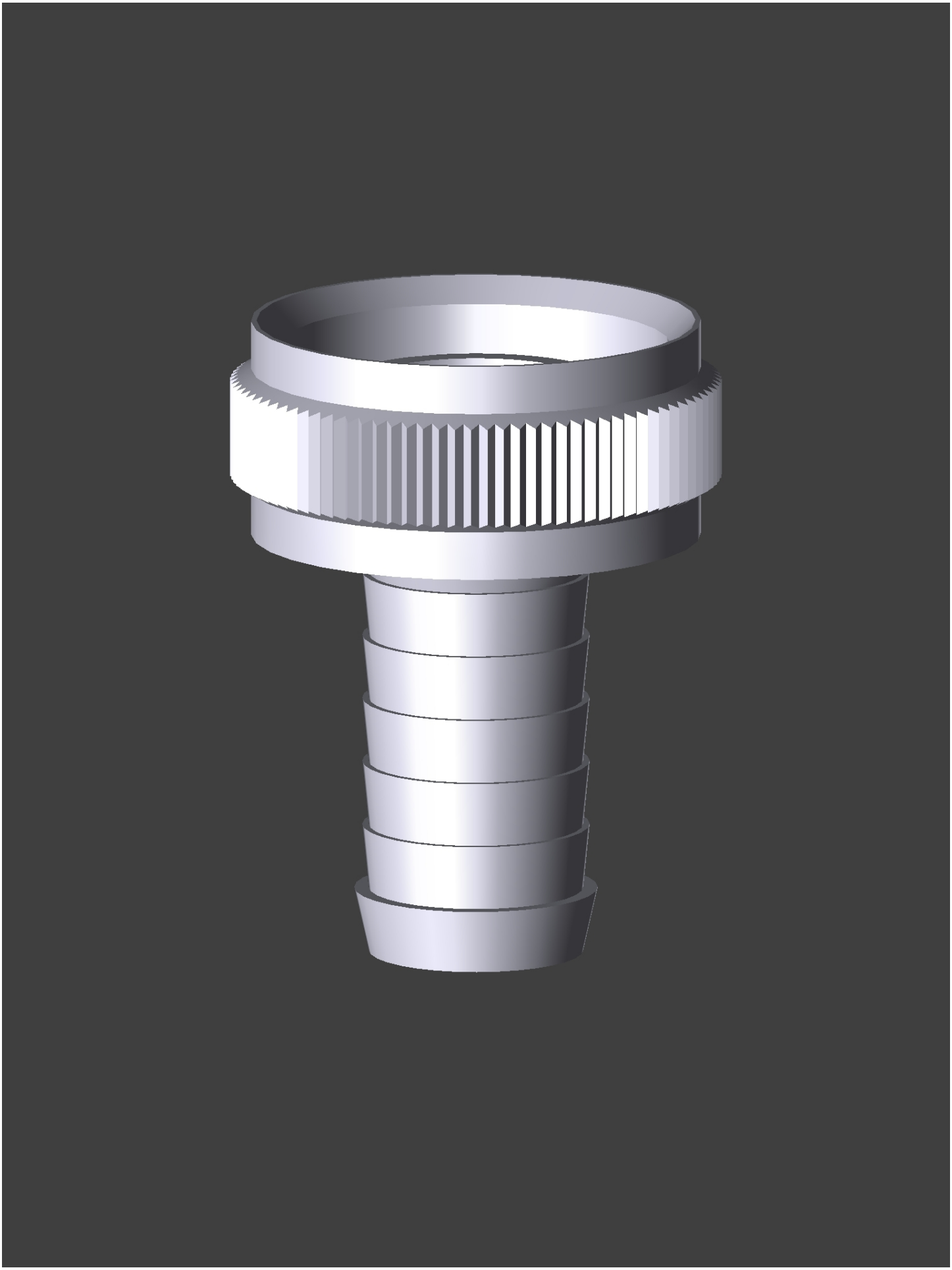

Date: June 22, 2015
Creator: TransMagic